mm [inch]

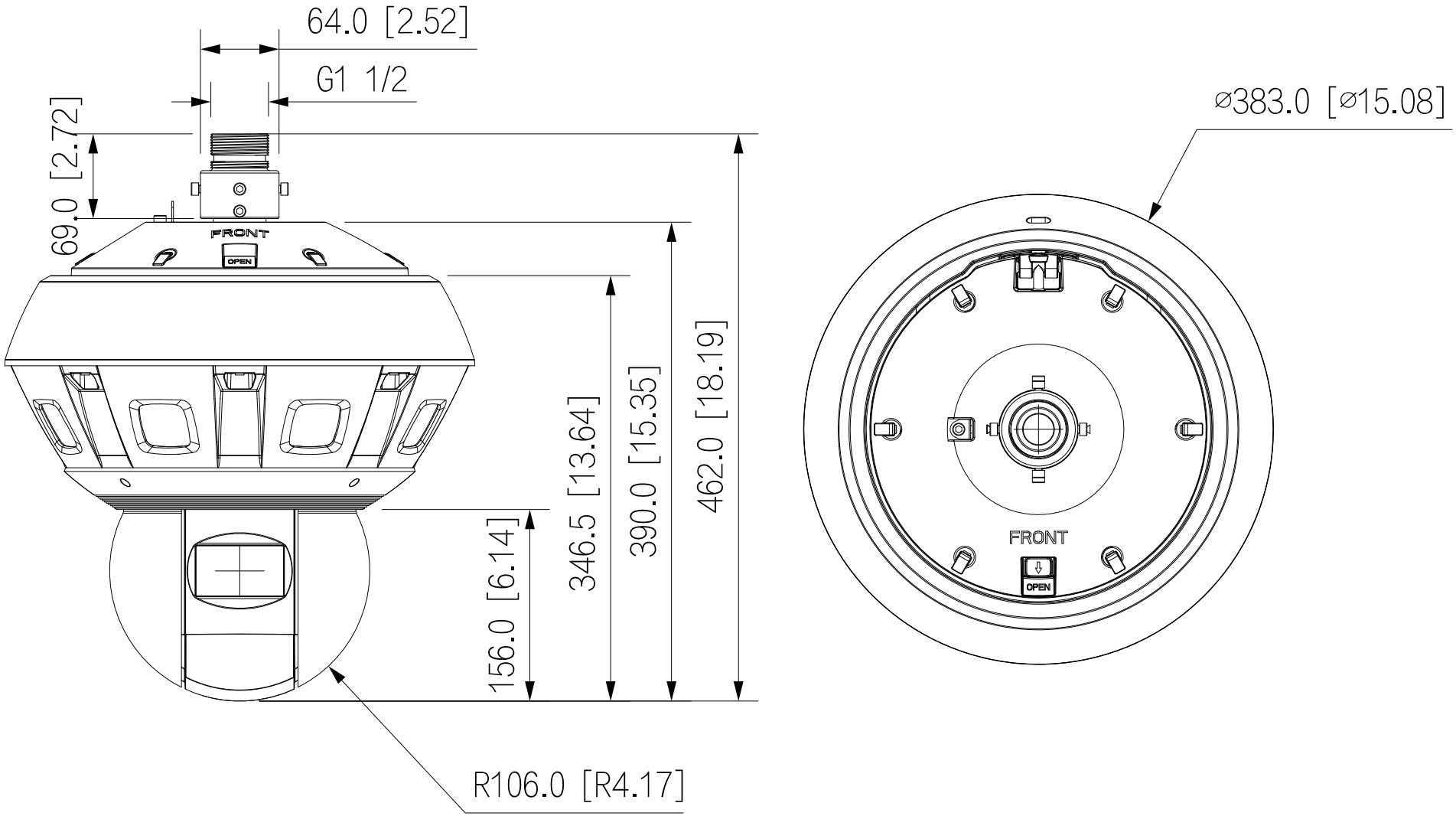
64.0 [2.52]
G1 1/2
69.0 [2.72]
FRONT
OPEN
156.0 [6.14]
346.5 [13.64]
390.0 [15.35]
462.0 [18.19]
R106.0 [R4.17]
ø383.0 [ø15.08]
FRONT
OPEN