mm [inch]

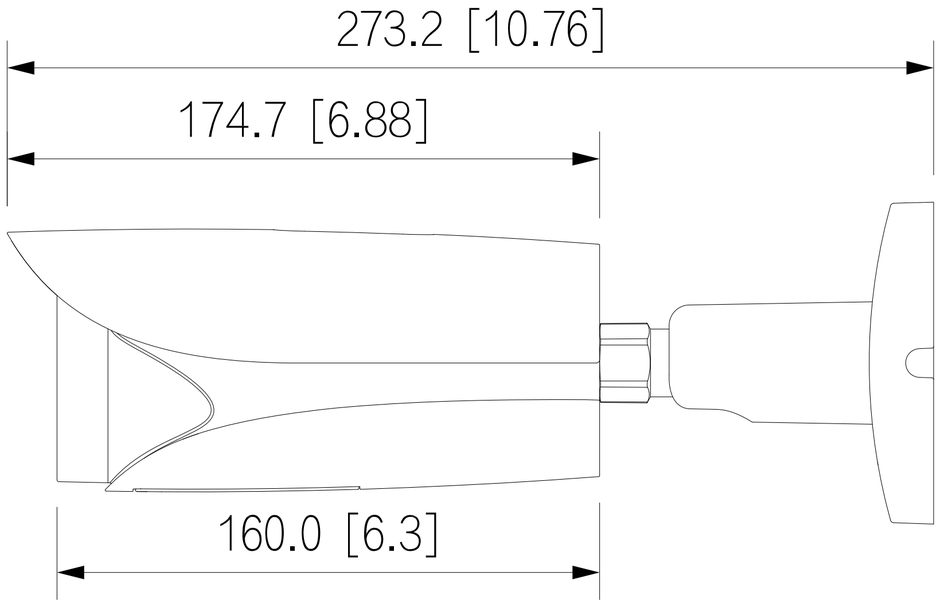
273.2 [10.76]
174.7 [6.88]
160.0 [6.3]

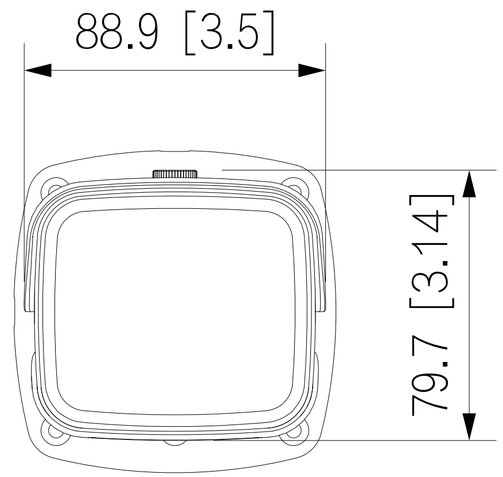
88.9 [3.5]
79.7 [3.14]

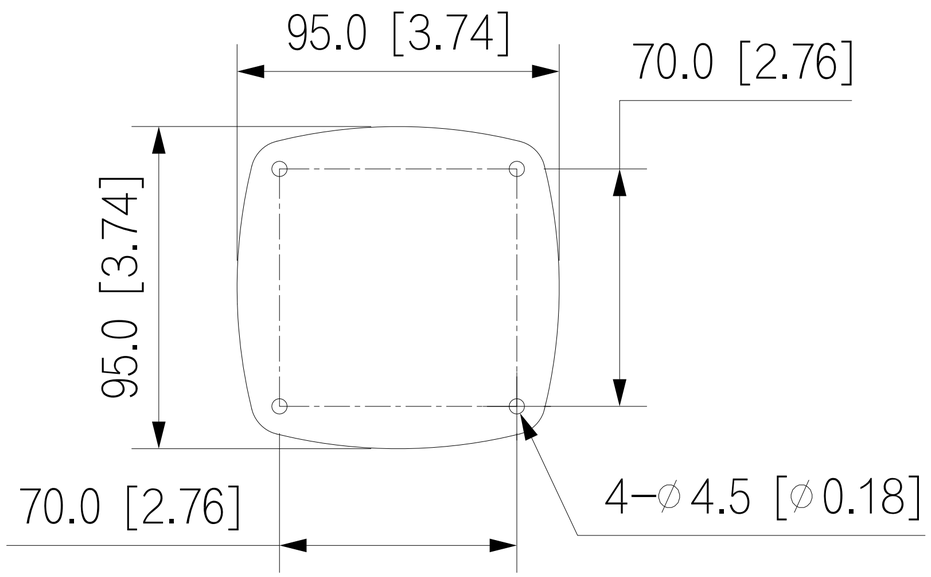
95.0 [3.74]
70.0 [2.76]
95.0 [3.74]
70.0 [2.76]
4−∅4.5 [∅0.18]