HIKVISION

# DS-2CD2386G2H-I(U)

## 8 MP AcuSense Powered-by-Darkfighter Fixed Turret Network Camera



AcuSense

Powered by DarkFighter




- High quality imaging with 8 MP resolution
- Excellent low-light performance via powered-by-DarkFighter technology
- Clear imaging against strong back light due to 120 dB WDR technology
- Efficient H.265+ compression technology
- Focus on human and vehicle classification based on deep learning
- -U: Built-in microphone for real-time audio security
- Water and dust resistant (IP67)



INFRONT TECHNOLOGIES

**Supplied by INFRONT TECHNOLOGIES**

**Phone 1300 736 970**

sales@infronttech.com.au · infronttech.com.au

*For more information call or email — Australia-wide sales, technical support and warranty service.*

## ▪ Specification

| | |
|---|---|
| **Camera** | |
| Image Sensor | 1/1.8" Progressive Scan CMOS |
| Max. Resolution | 3840 × 2160 |
| Min. Illumination | Color: 0.0008 Lux @ (F1.0, AGC ON), B/W: 0 Lux with IR |
| Shutter Time | 1/3 s to 1/100,000 s |
| Day & Night | IR cut filter |
| Angle Adjustment | Pan: 0° to 360°, tilt: 0° to 75°, rotate: 0° to 360° |
| **Lens** | |
| Lens Type | Fixed focal lens, 2.8 and 4 mm optional |
| Focal Length & FOV | 2.8 mm, horizontal FOV 108.8°, vertical FOV 56.4°, diagonal FOV 134.3°<br>4 mm, horizontal FOV 93.3°, vertical FOV 47.2°, diagonal FOV 114.2° |
| Lens Mount | M16 |
| Iris Type | Fixed |
| Aperture | F1.0 |
| Depth of Field | 2.8 mm: 3.3 m to ∞<br>4 mm: 3.8 m to ∞ |
| **DORI** | |
| DORI | 2.8 mm: D: 89 m, O: 35 m, R: 17 m, I: 8 m<br>4 mm: D: 109 m, O: 43 m, R: 21 m, I: 10 m |
| **Illuminator** | |
| Supplement Light Type | IR |
| Supplement Light Range | Up to 30 m |
| Smart Supplement Light | Yes |
| IR Wavelength | 850 nm |
| **Video** | |
| Main Stream | 50 Hz:<br>25 fps (3840 × 2160, 3200 × 1800, 2688 × 1520, 1920 × 1080, 1280 × 720)<br>60 Hz:<br>24 fps (3840 × 2160)<br>30 fps (3200 × 1800, 2688 × 1520, 1920 × 1080, 1280 × 720) |
| Sub-Stream | 50 Hz: 25 fps (1280 × 720, 640 × 480, 640 × 360)<br>60 Hz: 30 fps (1280 × 720, 640 × 480, 640 × 360) |
| Third Stream | 50 Hz: 10 fps (1920 × 1080, 1280 × 720, 640 × 480, 640 × 360)<br>60 Hz: 10 fps (1920 × 1080, 1280 × 720, 640 × 480, 640 × 360)<br>*Third stream is supported under certain settings. |
| Video Compression | Main stream: H.265/H.264/H.264+/H.265+,<br>Sub-stream: H.265/H.264/MJPEG,<br>Third stream: H.265/H.264,<br>*Third stream is supported under certain settings. |
| Video Bit Rate | 32 Kbps to 16 Mbps |
| H.264 Type | Baseline Profile, Main Profile, High Profile |
| H.265 Type | Main Profile |
| Bit Rate Control | CBR, VBR |
| Scalable Video Coding (SVC) | H.264 and H.265 encoding |
| Region of Interest (ROI) | 1 fixed region for main stream and sub-stream |

INFRONT TECHNOLOGIES

**Supplied by INFRONT TECHNOLOGIES**

**Phone 1300 736 970**

sales@infronttech.com.au · infronttech.com.au

*For more information call or email — Australia-wide sales, technical support and warranty service.*

| | |
|---|---|
| **Audio** | |
| Audio Compression | -U: G.711/G.722.1/G.726/MP2L2/PCM/MP3/AAC-LC |
| Audio Bit Rate | -U: 64 Kbps (G.711ulaw/G.711alaw)/16 Kbps (G.722.1)/16 Kbps (G.726)/16 Kbps to 64 Kbps (AAC-LC)/32 to 192 Kbps (MP2L2)/8 to 320 Kbps (MP3) |
| Audio Sampling Rate | -U: 8 kHz/16 kHz/32 kHz/44.1 kHz/48 kHz |
| Environment Noise Filtering | -U: Yes |
| **Network** | |
| Protocols | TCP/IP, ICMP, HTTP, HTTPS, FTP, DHCP, DNS, DDNS, RTP, RTSP, RTCP, NTP, UPnP, SMTP, IGMP, 802.1X, QoS, IPv4, IPv6, UDP, Bonjour, SSL/TLS, PPPoE, SNMP, WebSocket, WebSockets, SRTP, SFTP |
| Simultaneous Live View | Up to 6 channels |
| API | Open Network Video Interface (Profile S, Profile G, Profile T), ISAPI, SDK, ISUP |
| User/Host | Up to 32 users<br>3 user levels: administrator, operator, and user |
| Security | Password protection, complicated password, HTTPS encryption, 802.1X authentication (EAP-TLS, EAP-LEAP, EAP-MD5), watermark, IP address filter, basic and digest authentication for HTTP/HTTPS, WSSE and digest authentication for Open Network Video Interface, RTP/RTSP over HTTPS, control timeout settings, security audit log, TLS 1.1/1.2/1.3, host authentication (MAC address) |
| Network Storage | NAS (NFS, SMB/CIFS), Auto Network Replenishment (ANR) |
| Client | iVMS-4200, Hik-Connect, Hik-Central |
| Web Browser | Plug-in required live view: IE 10, IE 11,<br>Plug-in free live view: Chrome 57.0+, Firefox 52.0+, Edge 89+,<br>Local service: Chrome 57.0+, Firefox 52.0+, Edge 89+ |
| **Image** | |
| Image Parameters Switch | Yes |
| Image Settings | Rotate mode, saturation, brightness, contrast, sharpness, gain, white balance, adjustable by client software or web browser |
| Day/Night Switch | Day, Night, Auto, Schedule |
| Image Enhancement | BLC, HLC, 3D DNR |
| SNR | ≥ 52 dB |
| Wide Dynamic Range (WDR) | 120 dB |
| Privacy Mask | 4 programmable polygon privacy masks |
| **Interface** | |
| Ethernet Interface | 1 RJ45 10 M/100 M self-adaptive Ethernet port |
| On-Board Storage | Built-in memory card slot, support microSD/microSDHC/microSDXC card, up to 512 GB |
| Built-in Microphone | -U: Yes |
| Reset Key | Yes |
| **Event** | |
| Basic Event | Motion detection (support alarm triggering by specified target types (human and vehicle)), video tampering alarm, exception |
| Linkage | Upload to FTP/NAS/memory card, notify surveillance center, send email, trigger recording, trigger capture |
| Smart Event | Scene change detection |
| **Deep Learning Function** | |
| Face Capture | Yes |

INFRONT TECHNOLOGIES

**Supplied by INFRONT TECHNOLOGIES**

**Phone 1300 736 970**

sales@infronttech.com.au · infronttech.com.au

*For more information call or email — Australia-wide sales, technical support and warranty service.*

| | |
|---|---|
| Perimeter Protection | Line crossing, intrusion, region entrance, region exiting<br>Support alarm triggering by specified target types (human and vehicle) |
| **General** | |
| Power | 12 VDC ± 25%, 0.54 A, max. 6.5 W, Ø5.5 mm coaxial power plug, reverse polarity protection,<br>PoE: IEEE 802.3af, Class 3, max. 8 W |
| Material | Cover: metal, main body: metal |
| Dimension | Ø138.3 mm × 115.4 mm (Ø5.4" × 4.5") |
| Package Dimension | 170 mm × 170 mm × 160 mm (6.7" × 6.7" × 6.3") |
| Weight | Approx. 775 g (1.7 lb.) |
| With Package Weight | Approx. 1231 g (2.7 lb.) |
| Storage Conditions | -30 °C to 60 °C (-22 °F to 140 °F). Humidity 95% or less (non-condensing) |
| Startup and Operating Conditions | -30 °C to 60 °C (-22 °F to 140 °F). Humidity 95% or less (non-condensing) |
| General Function | Heartbeat, mirror, password reset via email, pixel counter, anti-banding |
| Language | 33 languages: English, Russian, Estonian, Bulgarian, Hungarian, Greek, German, Italian, Czech, Slovak, French, Polish, Dutch, Portuguese, Spanish, Romanian, Danish, Swedish, Norwegian, Finnish, Croatian, Slovenian, Serbian, Turkish, Korean, Traditional Chinese, Thai, Vietnamese, Japanese, Latvian, Lithuanian, Portuguese (Brazil), Ukrainian |
| **Approval** | |
| EMC | CE-EMC: EN 55032: 2015, EN 61000-3-2:2019, EN 61000-3-3: 2013+A1:2019, EN 50130-4: 2011 +A1: 2014,<br>IC: ICES-003: Issue 7,<br>RCM: AS/NZS CISPR 32: 2015 |
| Safety | CB: IEC 62368-1: 2014+A11,<br>CE-LVD: EN 62368-1: 2014/A11: 2017 |
| Environment | CE-RoHS: 2011/65/EU,<br>WEEE: 2012/19/EU,<br>Reach: Regulation (EC) No 1907/2006 |
| Protection | IP67: IEC 60529-2013 |

## ▪ Typical Application

Hikvision products are classified into three levels according to their anti-corrosion performance. Refer to the following description to choose for your using environment.

This model has NO SPECIFIC PROTECTION.

| Level | Description |
|---|---|
| Top-level protection | Hikvision products at this level are equipped for use in areas where professional anti-corrosion protection is a must. Typical application scenarios include coastlines, docks, chemical plants, and more. |
| Moderate protection | Hikvision products at this level are equipped for use in areas with moderate anti-corrosion demands. Typical application scenarios include coastal areas about 2 kilometers (1.24 miles) away from coastlines, as well as areas affected by acid rain. |
| No specific protection | Hikvision products at this level are equipped for use in areas where no specific anti-corrosion protection is needed. |

## ▪ Available Model

DS-2CD2386G2H-IU(2.8mm)

DS-2CD2386G2H-IU(4mm)

INFRONT TECHNOLOGIES

**Supplied by INFRONT TECHNOLOGIES**

**Phone 1300 736 970**

sales@infronttech.com.au · infronttech.com.au

*For more information call or email — Australia-wide sales, technical support and warranty service.*

DS-2CD2386G2H-I(2.8mm)
DS-2CD2386G2H-I(4mm)
DS-2CD2386G2H-IU(2.8mm)/Black

## ▪ Dimension

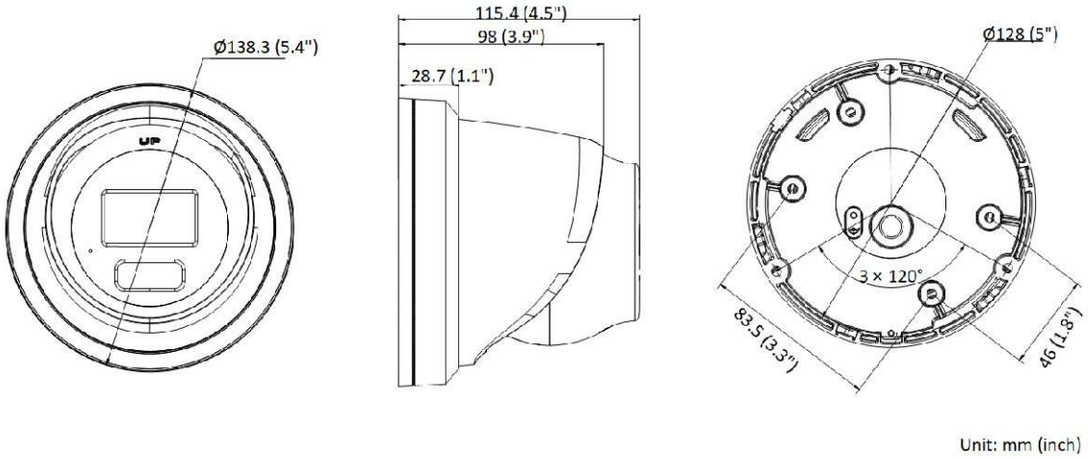


Unit: mm (inch)

## ▪ Accessory

### ▪ Optional

| DS-1273ZJ-140<br>Wall Mount | DS-1273ZJ-140B<br>Wall Mount | DS-1271ZJ-140<br>Pendant Mount | DS-1275ZJ-SUS<br>Vertical Pole Mount | DS-1276ZJ-SUS<br>Corner Mount |
|---|---|---|---|---|
|  |  |  |  |  |
| **DS-1280ZJ-PT6<br>Junction Box** | **DS-2280ZJ-WA140<br>Junction Box** | **DS-2200ZJ-WA-140<br>Wall Mount** | **DS-2200ZJ-WAJ-140<br>Wall Mount** | **DS-2210ZJ-WA-140<br>Pendant Mount** |
|  |  |  |  |  |


INFRONT TECHNOLOGIES

**Supplied by INFRONT TECHNOLOGIES**

**Phone 1300 736 970**

sales@infronttech.com.au · infronttech.com.au

*For more information call or email — Australia-wide sales, technical support and warranty service.*

| DS-1273ZJ-140(Black) Wall Mount | DS-1280ZJ-DM21(Black)Junction Box | DS-1271ZJ-140(Black) Pendant Mount | DS-1275ZJ-SUS(Black) Vertical Pole Mount | DS-1276ZJ-SUS(Black) Corner Mount |
|---|---|---|---|---|
|  |  |  |  |  |


Headquarters
No.555 Qianmo Road, Binjiang District,
Hangzhou 310051, China
T +86-571-8807-5998
www.hikvision.com


Follow us on social media to get the latest product and solution information.

Hikvision HikvisionHQ HikvisionHQ Hikvision_Global Hikvision Corporate Channel hikvisionhq


©Hikvision Digital Technology Co., Ltd. 2023 | Data subject to change without notice |



INFRONT TECHNOLOGIES

**Supplied by INFRONT TECHNOLOGIES**

**Phone 1300 736 970**

sales@infronttech.com.au · infronttech.com.au

*For more information call or email — Australia-wide sales, technical support and warranty service.*