

IV2455X

iVSEC 90° Wall Mount

Product Overview

The iVSEC IV2455X camera wall mount bracket is a versatile and essential component for your surveillance system, designed to enhance security camera installations. Its robust construction and adaptable design make it an invaluable accessory for both indoor and outdoor setups. With a sturdy build, it offers reliable support for your cameras, ensuring they remain in optimal positions.

What sets the IV2455X apart is its compatibility with a wide range of iVSEC camera models, making it a versatile choice for various surveillance scenarios. Its sleek and unobtrusive design ensures that it seamlessly integrates into any environment, delivering a professional appearance.

The bracket also features a smart cable management system that keeps your cables organized and protected from external elements, promoting longevity and reliability.

The IV2455X's durability shines through its IP66 rating, making it resilient against harsh weather conditions, offering steadfast protection for your security equipment. Whether securing a commercial space or a residential property, this wall mount bracket not only enhances your surveillance capabilities but does so with style, ease of installation, and dependable performance. With the iVSEC IV2455X camera wall mount bracket, you're equipping your security system for success and peace of mind.

Material Housing	ADC12
Material Screws	Stainless Steel 304
Colour	White
Load Bearing Capacity (kg)	0.5
Temperature Rating	-20°C to 60°C.
Humidity Rating	≤ 95% Relative Humidity
IP Rating	IP66
In the Box	Bracket, Screws, Allan Key

Product Dimensions (H x W x L) mm	169 x 98 x 180
Packaging Dimensions (H x W x L) mm	205 x 150 x 215
Weight (kg)	0.5
Warranty	3 Years
Compatibility List	IV2433X, IV2466X

IV2455X Wireframe

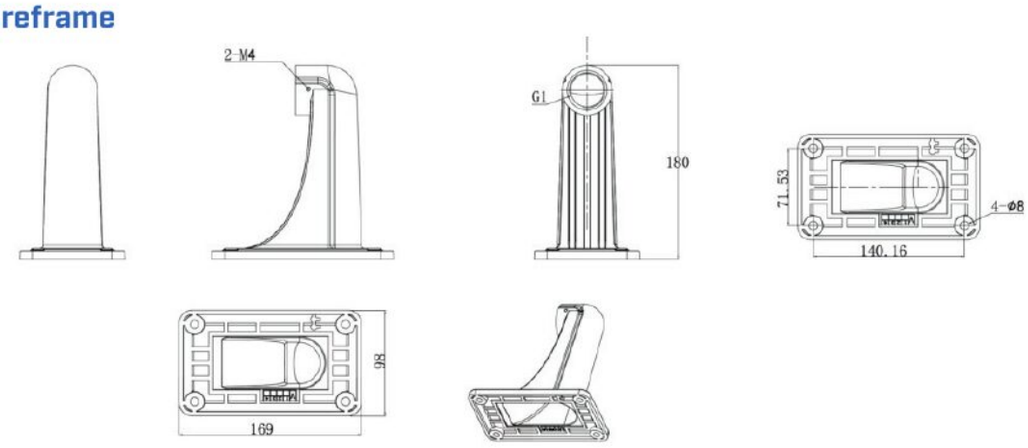

www.ivsecurity.com.au

Supplied by INFRONT TECHNOLOGIES

Phone 1300 736 970

sales@infronttech.com.au · infronttech.com.au

For more information call or email — Australia-wide sales, technical support and warranty service.