VIGI by tp-link

Datasheet
Security Never Shuts Down

Outdoor Full-Color

LPR Motorized Varifocal Bullet Network Camera

MODEL: InSight LPR345Z



ABC 123 ANPR

5X Optical Zoom

4MP | H.265+

Audio and Alarm Interface Available | Built-in Microphone | True WDR | IP67 Weatherproof

INFRONT TECHNOLOGIES

Supplied by INFRONT TECHNOLOGIES

Phone 1300 736 970

sales@infronttech.com.au · infronttech.com.au

For more information call or email — Australia-wide sales, technical support and warranty service.

Reliable ANPR Capability for Parking Exit/ Entrance Vehicle Access Control

Engineered specially for vehicle access control, this camera delivers instant and precise license plate recognition and recording, with real-time allowlist/blocklist, enhancing security while reducing manual verification. Ideal for gated communities, corporate campuses, and secure facilities.

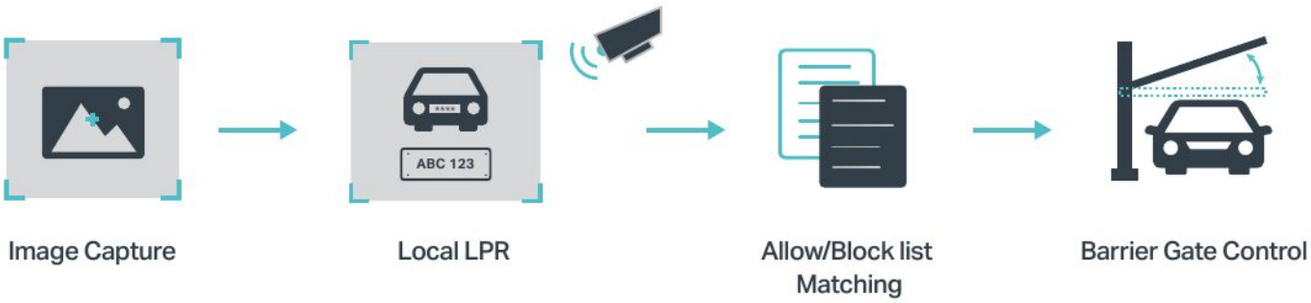

Flexible Installation

Find the perfect vantage point by simply securing your camera to the wall, or pole.*

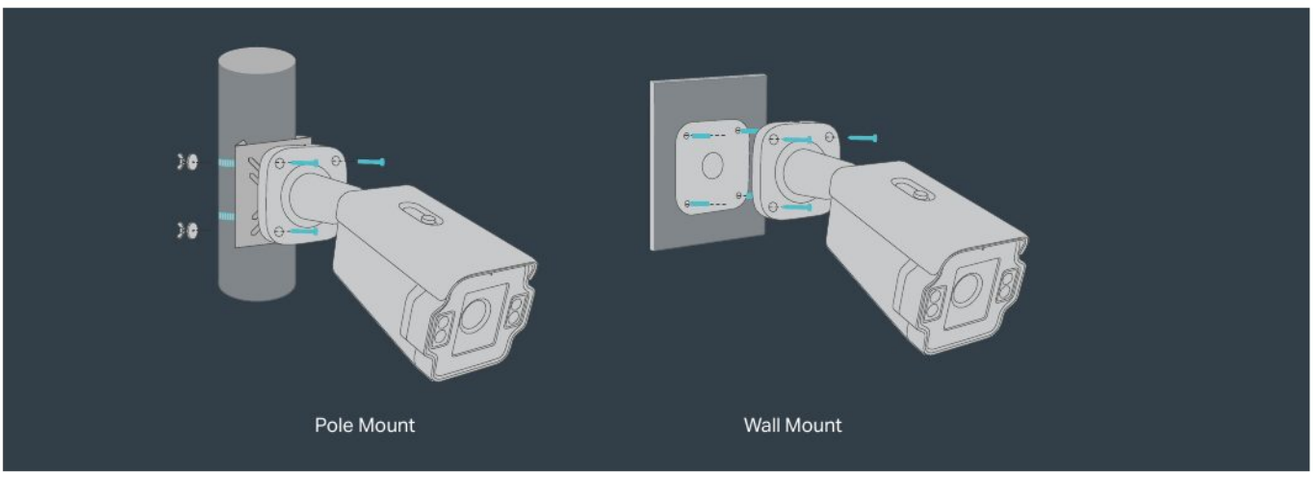

INFRONT TECHNOLOGIES

Supplied by INFRONT TECHNOLOGIES

Phone 1300 736 970

sales@infronttech.com.au · infronttech.com.au

For more information call or email — Australia-wide sales, technical support and warranty service.

Build Features



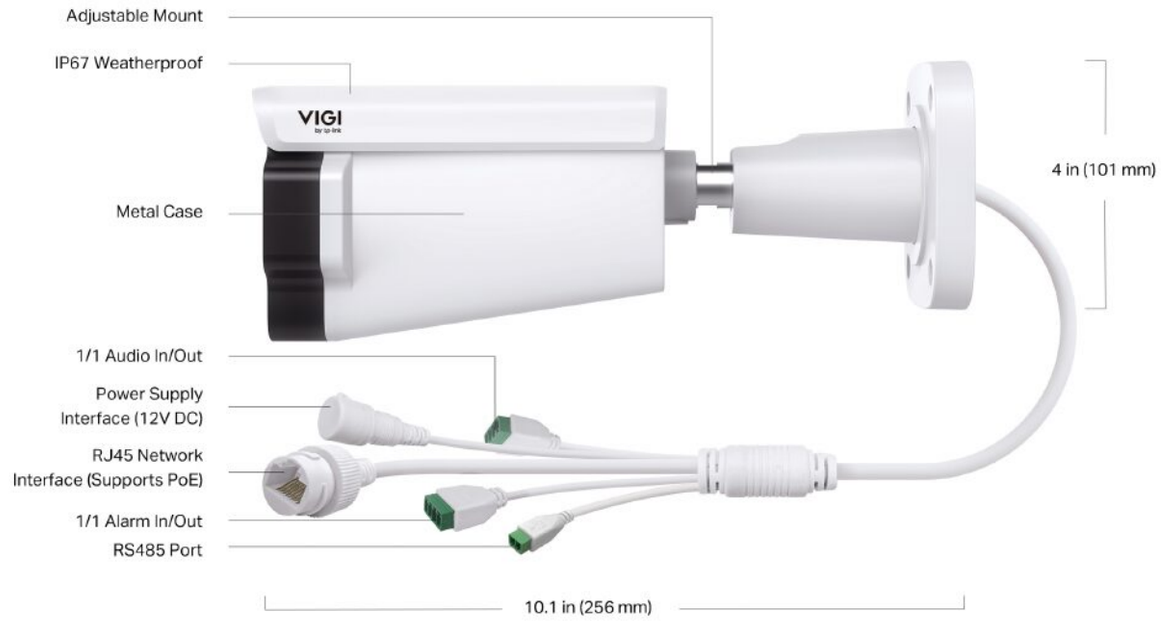

*The microSD card and pole mounting kits are not included in the package

INFRONT TECHNOLOGIES

Supplied by INFRONT TECHNOLOGIES

Phone 1300 736 970

sales@infronttech.com.au · infronttech.com.au

For more information call or email — Australia-wide sales, technical support and warranty service.

//Specifications

Camera	
Product Model	InSight LPR345Z
Image Sensor	1/2.9" Progressive Scan CMOS
Shutter Speed	1/100 to 1/1000 s
Slow Shutter	Yes
Min. Illumination	0.005 Lux; 0 Lux with White Light
Lens	
Type	Motorized Varifocal Lens
Focal Length	2.7-13.5 mm (5X Optical Zoom)
Aperture	F1.6
FOV	2.7-13.5 mm: • Horizontal FOV: 29.6°-102.0° • Vertical FOV: 16.8°-53.8° • Diagonal FOV: 34.1°-122.8°
Lens Mount	Φ14
DORI Distance	2.7-13.5 mm: • Detect: 66-207 m (217-579 ft) • Observe: 28-86 m (92-282 ft) • Recognize: 13-41 m (43-135 ft) • Identify: 7-21 m (23-69 ft)
Angle Adjustment (Manual)	
Range	Pan: 0° to 360°, Tilt: 0° to 90°, Rotation: 0° to 360°
Illuminator	
White LED	• Quantity: 4
Illuminator On/Off Control	Auto/Scheduled/Always off
Video	
Max. Resolution	2688 x 1520

INFRONT TECHNOLOGIES

Supplied by INFRONT TECHNOLOGIES

Phone 1300 736 970

sales@infronttech.com.au · infronttech.com.au

For more information call or email — Australia-wide sales, technical support and warranty service.

Main Stream	• Frame Rate: 50Hz: 1fps, 5fps, 10fps, 15fps, 20fps, 25fps 60Hz: 1fps, 5fps, 10fps, 15fps, 20fps, 25fps, 30fps • Resolution: 2688x1520, 2560x1440, 2304x1296, 2048x1280, 1920x1080
Sub-Stream	• Frame Rate: 50Hz: 1fps, 5fps, 10fps, 15fps, 20fps, 25fps 60Hz: 1fps, 5fps, 10fps, 15fps, 20fps, 25fps, 30fps • Resolution: 1280x720, 848x480, 704x576, 640x480, 640x360, 352x288, 320x240
Bit Rate Control	CBR, VBR
Video Compression	• Main Stream: H.265+/H.265/H.264+/H.264 • Sub-Stream: H.265/H.264
H.264 Type	High Profile
H.264+	Main Stream Supported
H.265 Type	Main Profile
H.265+	Main Stream Supported
Video Bit Rate	• Main Stream: 256 Kbps to 6 Mbps • Sub-Stream: 64 Kbps to 1024 Kbps
Image	
Image Settings	• Mirror • Brightness • Contrast • Saturation • Sharpness • Exposure • White Balance
Image Enhancement	BLC/3D DNR
Wide Dynamic Range	120 dB
SNR	≥ 52 dB
Image Parameters Switch	Yes
Privacy Mask	Up to 4 Masks

INFRONT TECHNOLOGIES

Supplied by INFRONT TECHNOLOGIES

Phone 1300 736 970

sales@infronttech.com.au · infronttech.com.au

For more information call or email — Australia-wide sales, technical support and warranty service.

ROI	1 Region
OSD Setting	Yes
Audio	
Audio Input	Built-in Microphone Audio In Interface
Audio Output	Audio Out Interface
Audio Compression	Yes
Audio Sampling Rate	8KHz
Environment Noise Filtering	Yes
Audio Bit Rate	64 Kbps(G.711 alaw)
Network	
Protocols	TCP/IP, UDP, ICMP, ARP, SNMP, RTMP, HTTP, HTTPS, DHCP, DNS, RTSP, RTP, NTP, IPv4, IPv6, UPnP, SSL/TLS, FTP/SFTP
ONVIF	Yes
API	Open Network Video Interface (Profile G/S/T)
Simultaneous Live View	3 Main Streams & 3 Sub-Streams
Client	Web UI
Web Browser	• Google Chrome® 57 and above • Firefox® 52 and above • Safari® 11 and above • Microsoft® Edge 91 and above
Cloud	Yes
Security	Password Protection, HTTPS Encryption, IP Address Filter, Digest Authentication, 802.1X authentication
Alarm and Event Management	
Basic Event	• Motion Detection • Camera Tampering • Exception (Illegal Login)
Alarm Linkage	• Push Notifications

INFRONT TECHNOLOGIES

Supplied by INFRONT TECHNOLOGIES

Phone 1300 736 970

sales@infronttech.com.au · infronttech.com.au

For more information call or email — Australia-wide sales, technical support and warranty service.

License Plate Recognition Management	
Capture Mode	• Trigger Type: Video Detection, I/O Coil • Picture Type: Scene Picture, Scene Picture + Close-up Picture • Max Recognition Distance: 8 m (26 ft) at default zoom; 15 m (49 ft) at maximum zoom • Scene Mode: Entrance & Exit
Capture Parameters	• Image Format: JPEG • Capture Resolution: 2560×1440 • LED Control: Supports automatic light control/ time control of LEDs • Smart Recognition: ANPR • Capture Picture Overlay: Capture Time, Plate Number, Vehicle Permission Type (Allowlist, Blocklist, Temporary)
Entrance and Exit	• Barrier Gate Control Mode: By Camera • Relay Output: 1-ch relay output, supporting opening and closing of barrier gates • Allowlist And Blocklist: Up to 100,000 allowlist and blocklist totally (recommended for use with a microSD card)
Interface	
Network Interface	1 RJ45 10/100M Self-Adaptive Ethernet Port, PoE
On-board Storage	Built-In Memory Card Slot, Support MicroSD Card, up to 512 GB*
Built-in Speaker	N/A
Built-in Microphone	Yes; Records Anything Going on within a 16.4-ft (5 m) Radius of the Camera
Audio	1 Audio In, 1 Audio Out
Alarm	1 Alarm In, 1 Alarm Out
RS-485 Port	Yes
Reset Button	Yes
Power	DC Power Port
General	
Operating Temperature	-30 °C to 60 °C (-22 °F to 140 °F)

INFRONT TECHNOLOGIES

Supplied by INFRONT TECHNOLOGIES

Phone 1300 736 970

sales@infronttech.com.au · infronttech.com.au

For more information call or email — Australia-wide sales, technical support and warranty service.

Storage Temperature	-40 °C to 60 °C (-40 °F to 140 °F)
Operating Humidity	95% or Less (Non-Condensing)
Storage Humidity	95% or Less (Non-Condensing)
Package Contents	• VIGI Network Camera • Quick Start Guide • Waterproof Cable Attachments • Mounting Accessories
Power Supply	• 12V DC ± 5%, Max.10.8 W, 5.5 mm Coaxial Power Plug • PoE: 802.3af, class 0, Max.12.95 W
Protection	IP67 Weatherproof, IK10 Vandal Proof
Material	Metal
Net Weight	1.07 Kg
Product Dimensions	10.1 × 3.9 × 4 in (256 × 100 × 101 mm)
Certifications	CE, NTRA, KC, FCC, IP67, IC, IK10, VCCI, BSMI, ONVIF

Dimensions

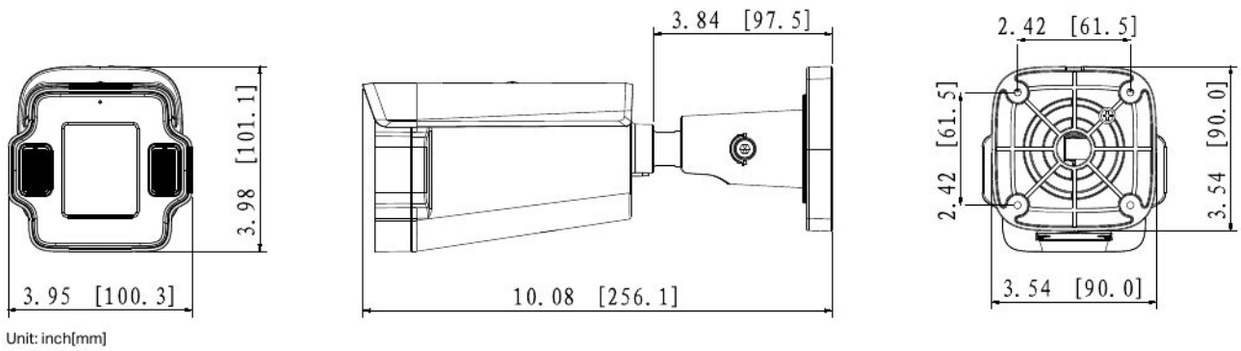

*The Micro SD card and pole mounting kits are not included in the package.

Specifications are subject to change without notice and can be found at **www.vigi.com**.

©2025 TP-Link

INFRONT TECHNOLOGIES

Supplied by INFRONT TECHNOLOGIES

Phone 1300 736 970

sales@infronttech.com.au · infronttech.com.au

For more information call or email — Australia-wide sales, technical support and warranty service.