VIGI by tp-link

Datasheet
Security Never Shuts Down

Outdoor Full-Color

25X Network Speed Dome

MODEL: InSight PTZ5425



25X Optical Zoom

4MP | H.265+
InSight PTZ5425

360° Wide-Area Coverage	Intelligent Auto Tracking	Up to 328 ft (100 m) IR Distance†	People & Vehicle Attributes Analytics	Red & Blue Flashing Lights and Siren	IP66 Weatherproof

INFRONT TECHNOLOGIES

Supplied by INFRONT TECHNOLOGIES
Phone 1300 736 970
sales@infronttech.com.au · infronttech.com.au
For more information call or email — Australia-wide sales, technical support and warranty service.

One Camera, Total Coverage, Budget Smart

Get 360 monitoring and sharp close-ups with one single device. Slash deployment costs and complexity. Ideal for large-scale scenarios, such as parking lots, schools, farms, and construction sites.



Smart Detection

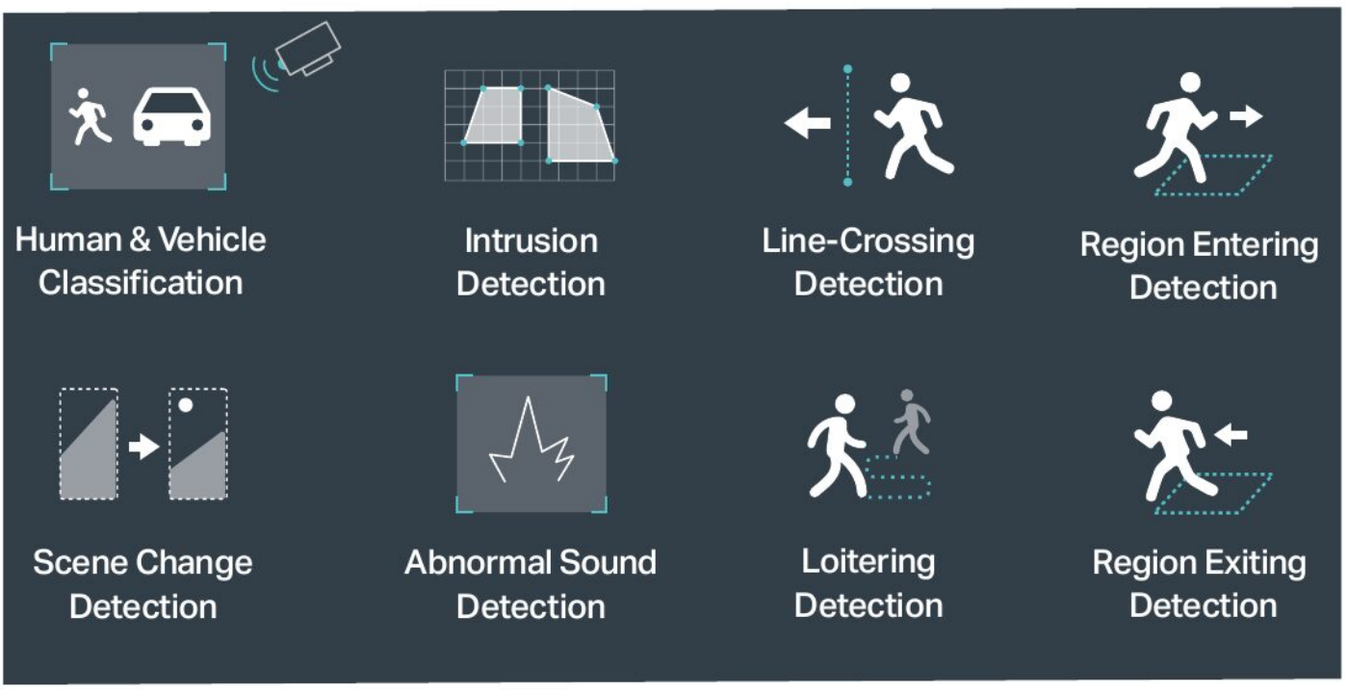

INFRONT TECHNOLOGIES

Supplied by INFRONT TECHNOLOGIES

Phone 1300 736 970

sales@infronttech.com.au · infronttech.com.au

For more information call or email — Australia-wide sales, technical support and warranty service.

Powerful Pan Tilt Zoom

- 25X Optical Zoom & 16X Digital Zoom
- Human/Vehicle/Event-Triggered Auto Tracking
- Rapid Focus
- Electronic Image Stabilization (EIS)
- Joystick Support (Pelco Protocol)
- Pan Speed: Configurable from 0° to 160°/s; Preset Speed: 240°/s
- Tilt Speed: Configurable from 0° to 120°/s, Preset Speed 200°/s
- Power Up Actions
- Remote Monitoring & Configuration



Durable Performance in Harsh Outdoor Conditions

- IP66 Weatherproof
- IK08 Vandal-Proof
- 6 kV Lightning Protection
- Digital Defog
- Built-in Lens Heater



INFRONT TECHNOLOGIES

Supplied by INFRONT TECHNOLOGIES

Phone 1300 736 970

sales@infronttech.com.au · infronttech.com.au

For more information call or email — Australia-wide sales, technical support and warranty service.

Build Features





INFRONT TECHNOLOGIES

Supplied by INFRONT TECHNOLOGIES

Phone 1300 736 970

sales@infronttech.com.au · infronttech.com.au

For more information call or email — Australia-wide sales, technical support and warranty service.

//Specifications

Camera	
Product Model	InSight PTZ5425
Image Sensor	1/2.9" Progressive Scan CMOS
Shutter Speed	1/3 to 1/30000 s
Slow Shutter	Yes
Min. Illumination	0.005 Lux; 0 Lux with IR/White Light
Day/Night Mechanism	IR Cut Filter
Day/Night Switch	Unified/ Scheduled/ Auto
Lens	
Type	Motorized Varifocal Lens
Focal Length	5.2-130 mm (25X Optical Zoom)
Aperture	Max. F1.6
FOV	• Horizontal FOV: 2.30°-57.06° • Vertical FOV: 1.31°-32.74° • Diagonal FOV: 2.63°-65.01°
DORI Distance	Wide • D: 351 ft (107 m) • O: 144 ft (44 m) • R: 69 ft (21 m) • I: 36 ft (11 m) Tele • D: 8530 ft (2600 m) • O: 3553 ft (1083 m) • R: 1706 ft (520 m) • I: 853 ft (260 m)

INFRONT TECHNOLOGIES

Supplied by INFRONT TECHNOLOGIES

Phone 1300 736 970

sales@infronttech.com.au · infronttech.com.au

For more information call or email — Australia-wide sales, technical support and warranty service.

PTZ	
Pan/tilt Range	Pan: 0° to 360°, Tilt: -20° to 90° (Auto Flip)
Pan/tilt Speed	Pan Speed: • Configurable from 0° to 160°/s • Preset Speed: 240°/s Tilt Speed: • Configurable from 0° to 120°/s • Preset Speed: 200°/s
Proportional Pan	Yes
Presets	300
Patrol Scan	8 patrols, up to 8 presets for each patrol
Pattern Scan	16 Pattern Scans
Park Action	Preset, Patrol Scan, Pattern Scan, Home
Power Up Actions	Yes
3D Positioning	Yes
PTZ Status Display	Yes
Preset Freezing	Yes
Scheduled Task	Preset, Patrol Scan, Pattern Scan
PTZ Protocol	Pelco-D, Pelco-P, Self-adaptive
Illuminator	
Illuminator Type	• 2× IR LED • 2× Integrated Infrared-White LED
Illuminator Distance	• IR LED: 100 m (328 ft)† • White LED: 50 m (164 ft)†
Illuminator On/Off Control	Auto/Scheduled/Always on/Always off

INFRONT TECHNOLOGIES

Supplied by INFRONT TECHNOLOGIES

Phone 1300 736 970

sales@infronttech.com.au · infronttech.com.au

For more information call or email — Australia-wide sales, technical support and warranty service.

Video	
Max. Resolution	2688x1520
Main Stream	• Frame Rate: 50Hz: 1fps, 5fps, 10fps,15fps, 20fps, 25fps 60Hz: 1fps, 5fps, 10fps,15fps, 20fps, 25fps, 30fps • Resolution: 2688x1520, 2560x1440, 2304x1296, 2048x1280
Sub-Stream	• Frame Rate: 50Hz: 1fps, 5fps, 10fps,15fps, 20fps, 25fps 60Hz: 1fps, 5fps, 10fps,15fps, 20fps, 25fps, 30fps • Resolution: 840x480, 704x576, 640x480, 640x360, 352x288, 320x240
Third Stream	H.264/H.265 • Frame Rate: 50Hz: 1fps, 5fps, 10fps,15fps, 20fps, 25fps 60Hz: 1fps, 5fps, 10fps,15fps, 20fps, 25fps, 30fps • Resolution: 1920x1080, 1280x960, 1280x720, 848x480, 704x576 MJPEG • Frame Rate: 50Hz: 1fps, 5fps, 10fps,15fps, 20fps, 25fps 60Hz: 1fps, 5fps, 10fps,15fps, 20fps, 25fp • Resolution: 1280x720, 848x480, 704x576
Bit Rate Control	CBR, VBR
Video Compression	• Main Stream: H.265+/H.265/H.264+/H.264 • Sub-Stream: H.265/H.264 • Third-stream: H.265/H.264/MJPEG
H.264 Type	High Profile
H.264+	Main Stream Supported
H.265 Type	High Profile Main Profile
H.265+	Main Stream Supported

INFRONT TECHNOLOGIES

Supplied by INFRONT TECHNOLOGIES

Phone 1300 736 970

sales@infronttech.com.au · infronttech.com.au

For more information call or email — Australia-wide sales, technical support and warranty service.

Video Bit Rate	• Main Stream: 4096 Kbps to 16384 Kbps • Sub-Stream: 128 Kbps to 2048 Kbps • Third Stream: H.264/H.265: 768 Kbps to 16384 Kbps MJPEG: 6144 Kbps to 16384 Kbps (1280x720); 4096 Kbps to 16384 Kbps (848x480)
Image	
Image Settings	• Mirror • Brightness • Contrast • Saturation • Sharpness • Exposure • WDR • White Balance • IR Light Intensity • HLC Adjustable • Low Illuminator
Image Enhancement	BLC/3D DNR/HLC/SmartIR
Wide Dynamic Range	120 dB
Defog	Digital Defog
Image Stabilization	EIS
SNR	≥ 52 dB
Image Parameters Switch	Yes
Privacy Mask	Up to 4 Masks
ROI	8 Regions
OSD Setting	Yes
Audio	
Audio Communication	Two-Way Audio
Audio Input	Built-in Microphone Audio In Interface
Audio Output	Built-in Speaker Audio Out Interface
Audio Compression	Yes

INFRONT TECHNOLOGIES

Supplied by INFRONT TECHNOLOGIES

Phone 1300 736 970

sales@infronttech.com.au · infronttech.com.au

For more information call or email — Australia-wide sales, technical support and warranty service.

Audio Sampling Rate	8KHz
Environment Noise Filtering	Yes
Audio Bit Rate	64 Kbps (G.711 alaw)
Network	
Protocols	TCP/IP, UDP, ICMP, ARP, SNMP, SMTP, RTMP, HTTP, HTTPS, DHCP, DNS, RTSP, RTP, NTP, IPv4, IPv6, UPnP, SSL/TLS, FTP/SFTP
ONVIF	Yes
API	Open Network Video Interface (Profile G/S/T)
Simultaneous Live View	3 Main Streams & 3 Sub-Streams & 3 Third-streams
Client	VIGI App, Web UI, VIGI Cloud VMS
Web Browser	• Google Chrome® 57 and above • Firefox® 52 and above • Safari® 11 and above • Microsoft® Edge 91 and above
Cloud	Yes
Security	Password Protection, HTTPS Encryption, IP Address Filter, Digest Authentication, 802.1X Authentication
Alarm and Event Management	
Smart Event	• Intrusion Detection • Line Crossing Detection • Region Entering Detection • Region Exiting Detection • Loitering Detection • Human Detection • Vehicle Detection • Abnormal Sound Detection • Scene Change Detection
Basic Event	• Motion Detection (Enhanced with Human & Vehicle Classification for more accurate alerts) • Camera Tampering • Exception (Illegal Login)

INFRONT TECHNOLOGIES

Supplied by INFRONT TECHNOLOGIES

Phone 1300 736 970

sales@infronttech.com.au · infronttech.com.au

For more information call or email — Australia-wide sales, technical support and warranty service.

Alarm Linkage	• Memory Card Video Recording • Upload Capture • Alarm Output Device • Push Notifications • Send to Alarm Server • Active Defence-Sound Alarm • Active Defence-Light Alarm • Email Alarm • Smart Tracking
Smart Tracking	Intelligent Auto Tracking • Human-Triggered • Vehicle-Triggered • Event-Triggered
Deep Learning Function	
People & Vehicle Analytics	Search and filter to people or vehicle of interest based on many different attributes, making post-event search faster and easier.‡
Interfaces	
Network Interface	1 RJ45 10/100M Self-Adaptive Ethernet Port, PoE
On-board Storage	Built-In Memory Card Slot, Support MicroSD Card, up to 512 GB**
Built-in Speaker	Yes
Built-in Microphone	Yes; Records Anything Going on within a 16.4-ft (5 m) Radius of the Camera
Audio	1 Audio In, 1 Audio Out
Alarm	2 Alarm In, 1 Alarm Out Red and Blue Warning Lights
Reset Button	Yes
Power	DC Power Port
RS-485 Port	Yes
General	
Operating Temperature	-30 °C to 65 °C (-22 °F to 149 °F)
Storage Temperature	-40 °C to 65 °C (-40 °F to 149 °F)
Operating Humidity	95% or Less (Non-Condensing)

INFRONT TECHNOLOGIES

Supplied by INFRONT TECHNOLOGIES

Phone 1300 736 970

sales@infronttech.com.au · infronttech.com.au

For more information call or email — Australia-wide sales, technical support and warranty service.

Storage Humidity	95% or Less (Non-Condensing)
Package Contents	• VIGI Network Camera • Installation Guide • Waterproof Cable Attachments • Mounting Accessories
Power Supply	DC: 12V DC ± 5%, Max. 21.6 W, 5.5 mm Coaxial Power Plug PoE: 802.3at, Class 4, Max. 24.7 W
Protection	• IP66 Weatherproof • IK08 Vandal-Proof • 6 kV Lightning Protection
Material	Metal
Net Weight	2.8 kg
Product Dimensions	Φ6.3 × 10.6 in (Φ160 × 270 mm)
Certifications	CE, NTRA, VCCI, KC, BSMI, FCC, IP66, IK08, ONVIF

Dimensions

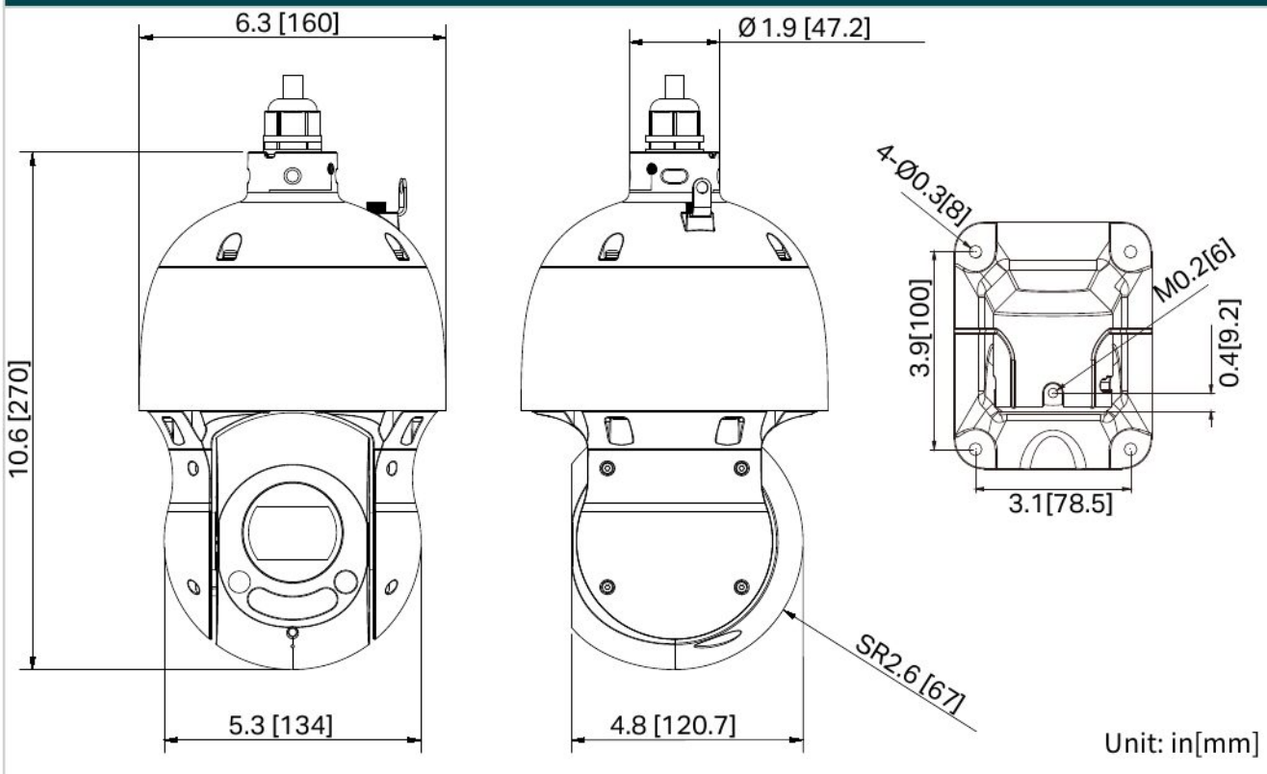

‡This feature must be used with VIGI specified software.

*The Micro SD card and pole mounting kits are not included in the package.

†Calculations are based on laboratory testing. Actual data is not guaranteed and will vary as a result of client limitations and environmental factors

Specifications are subject to change without notice and can be found at **www.vigi.com**.

©2026 TP-Link

INFRONT TECHNOLOGIES

Supplied by INFRONT TECHNOLOGIES

Phone 1300 736 970

sales@infronttech.com.au · infronttech.com.au

For more information call or email — Australia-wide sales, technical support and warranty service.