VIGI by tp-link

Datasheet
Security Never Shuts Down

Outdoor ColorPro

Panoramic Network Camera

MODEL: InSight S385DPS



Ultra Low Light Night Vision 4K

180° Panorama Dual-Lens	People & Vehicle Analytics**	Human & Vehicle Classification	Active Defense	IP67 Weatherproof

INFRONT TECHNOLOGIES

Supplied by INFRONT TECHNOLOGIES

Phone 1300 736 970

sales@infronttech.com.au · infronttech.com.au

For more information call or email — Australia-wide sales, technical support and warranty service.

Dual-Lens Stitched Panoramic Imaging

Advanced stitching technology merges dual lenses into a seamless 180° panoramic view, optimizing wide-area coverage while reducing deployment costs..

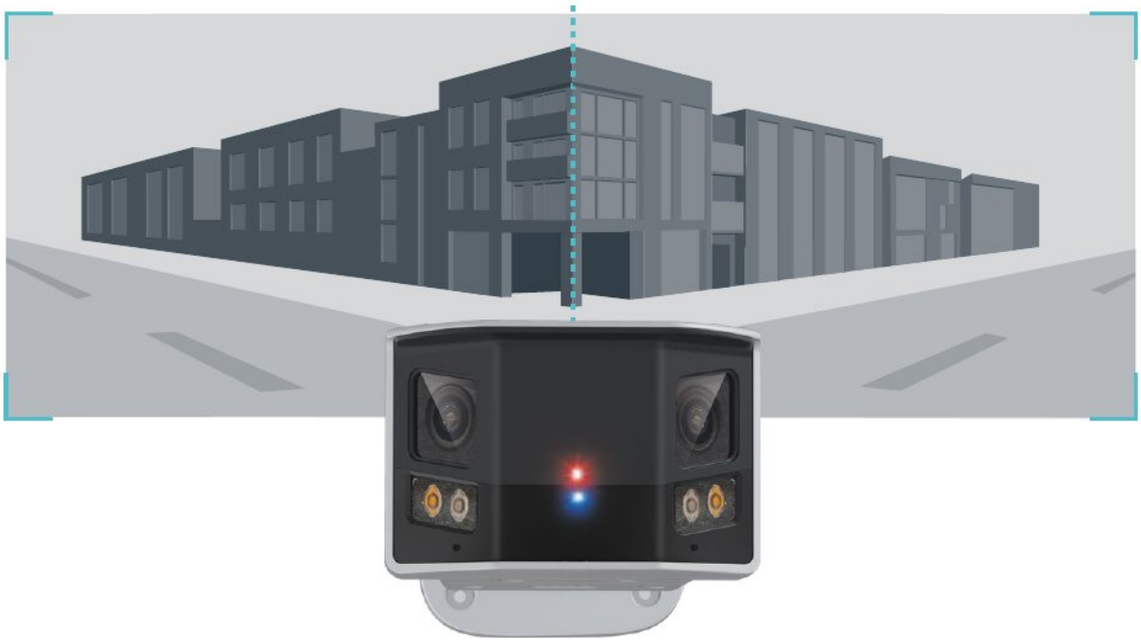

Smart Detection



Human & Vehicle Classification

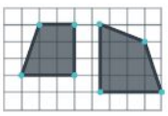

Intrusion Detection



Line-Crossing Detection

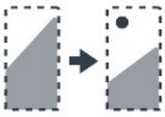

Scene Change Detection



Region Entering Detection



Region Exiting Detection



Loitering Detection



Abnormal Sound Detection

INFRONT TECHNOLOGIES

Supplied by INFRONT TECHNOLOGIES

Phone 1300 736 970

sales@infronttech.com.au · infronttech.com.au

For more information call or email — Australia-wide sales, technical support and warranty service.

VIGI Surveillance Solution

The VIGI professional surveillance system by TP-Link is dedicated to protecting the business that you've worked hard to build—whenever, wherever.

Outstanding functions, reliable quality guarantees, and simplified installation work together to ensure your business stays safe and sound.

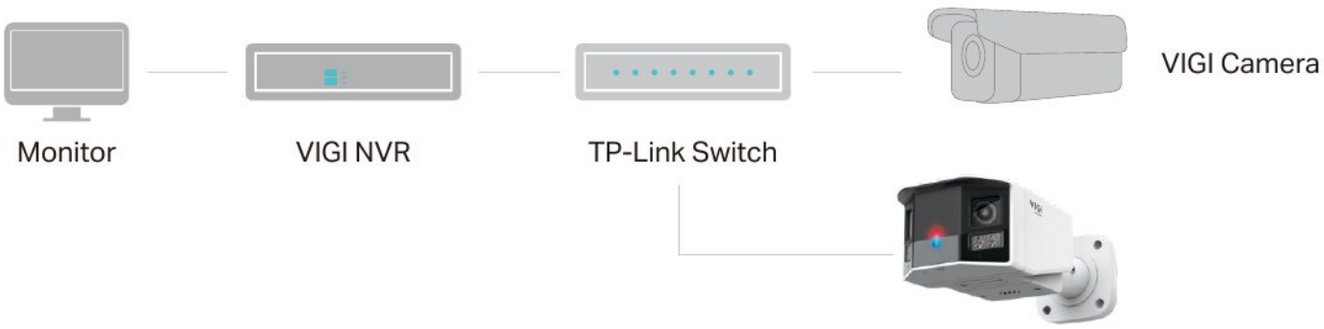

Flexible Installation

Find the perfect vantage point by simply securing your camera to the ceiling, wall, or pole.*

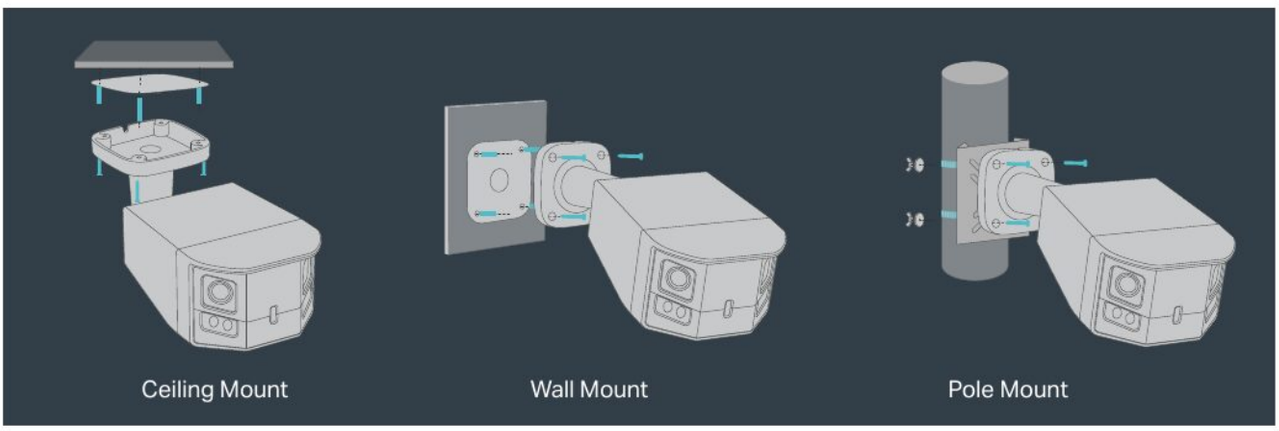

INFRONT TECHNOLOGIES

Supplied by INFRONT TECHNOLOGIES

Phone 1300 736 970

sales@infronttech.com.au · infronttech.com.au

For more information call or email — Australia-wide sales, technical support and warranty service.

Build Features





*1 The micro SD card and pole mounting kits are not included in the package.

INFRONT TECHNOLOGIES

Supplied by INFRONT TECHNOLOGIES

Phone 1300 736 970

sales@infronttech.com.au · infronttech.com.au

For more information call or email — Australia-wide sales, technical support and warranty service.

//Specifications

Camera	
Product Model	InSight S385DPS
Image Sensor	Dual 1/1.79" Progressive Scan CMOS
Shutter Speed	1/3 to 1/10000 s
Slow Shutter	Yes
Min. Illumination	0.0005 Lux; 0 Lux with IR/White Light
Day/Night Mechanism	IR Cut Filter
Day/Night Switch	Unified/ Scheduled/ Auto
Lens	
Type	Fixed Focal Lens
Focal Length	5 mm
Aperture	Dual F1.0
FOV	Horizontal FOV: 180°, Vertical FOV: 51°, Diagonal FOV: 180°
Lens Mount	M16
DORI Distance	5mm: • D: 249 ft (76 m) • O: 95 ft (29 m) • R: 46 ft (14 m) • I: 23 ft (7 m)
Angle Adjustment (Manual)	
Range	Pan: 0° to 360°, Tilt: 0° to 90°, Rotation: 0° to 360°
Illuminator	
IR LED	• Quantity: 2 • Range: 164 ft (50 m)† • Wavelength: 850 nm
White LED	• Quantity: 2 • Range: 164 ft (50 m)†
Illuminator On/Off Control	Auto/Scheduled/Always on/Always off

INFRONT TECHNOLOGIES

Supplied by INFRONT TECHNOLOGIES

Phone 1300 736 970

sales@infronttech.com.au · infronttech.com.au

For more information call or email — Australia-wide sales, technical support and warranty service.

Video	
Max. Resolution	5456×1520
Main Stream	• Frame Rate: 50Hz: 1fps, 5fps, 10fps, 15fps, 20fps, 25fps 60Hz: 1fps, 5fps, 10fp,s 15fps, 20fps, 24fps • Resolution: 5456×1520, 4096×1152, 2160×608 Note: Enabling people counting or object attribute analysis limits the frame rate to 20fps.
Sub-Stream	• Frame Rate: 50Hz: 1fps, 5fps, 10fps, 15fps, 20fps, 25fps 60Hz: 1fps, 5fps, 10fps, 15fps, 20fps, 24fps • Resolution: 2160×608, 1280×360 Note: Enabling people counting or object attribute analysis limits the frame rate to 20fps.
Bit Rate Control	CBR, VBR
Video Compression	• Main Stream: H.265+/H.265/H.264+/H.264 • Sub-Stream: H.265/H.264
H.264 Type	High Profile
H.264+	Main Stream Supported
H.265 Type	Main Profile
H.265+	Main Stream Supported
Video Bit Rate	• Main Stream: 256 Kbps to 8 Mbps • Sub-Stream: 64 Kbps to 1024 Kbps

INFRONT TECHNOLOGIES

Supplied by INFRONT TECHNOLOGIES

Phone 1300 736 970

sales@infronttech.com.au · infronttech.com.au

For more information call or email — Australia-wide sales, technical support and warranty service.

Image	
Image Settings	• Mirror • Brightness • Contrast • Saturation • Sharpness • Exposure • WDR • White Balance • Prevent Overexposure to Infrared Light • HLC Adjustable by Client Software
Image Enhancement	BLC/3D DNR/HLC/SmartIR
Wide Dynamic Range	120 dB
SNR	≥ 52 dB
Image Parameters Switch	Yes
Privacy Mask	Up to 4 Masks
ROI	4 Regions
OSD Setting	Yes
Audio	
Audio Communication	Two-Way Audio
Audio Input	Built-in Dual-Microphone Audio In Interface
Audio Output	Built-in Speaker Audio Out Interface
Audio Compression	Yes
Audio Sampling Rate	8KHz
Environment Noise Filtering	Yes
Audio Bit Rate	64 Kbps (G.711 alaw)
Network	
Protocols	TCP/IP, UDP, ICMP, HTTP, HTTPS, DHCP, DNS, RTSP, NTP, UPnP UDP, SSL/TLS, FTP/SFTP, RTP, IPv4, IPv6, ARP, SMTP, SNMP
ONVIF	Yes

INFRONT TECHNOLOGIES

Supplied by INFRONT TECHNOLOGIES

Phone 1300 736 970

sales@infronttech.com.au · infronttech.com.au

For more information call or email — Australia-wide sales, technical support and warranty service.

API	Open Network Video Interface (Profile S/T/G)
Simultaneous Live View	3 Main Streams & 3 Sub-Streams
Client	VIGI App, Web UI, VIGI Cloud VMS, VIGI Config Tool, VIGI PC Client
Web Browser	• Google Chrome® 57 and above • Firefox® 52 and above • Safari® 11 and above • Microsoft® Edge 91 and above
Cloud	Yes
Security	Password Protection, HTTPS Encryption, IP Address Filter, Digest Authentication, 802.1X Authentication
Alarm and Event Management	
Smart Event	• Intrusion Detection • Line-Crossing Detection • Region Entering Detection • Region Exiting Detection • Loitering Detection • People Detection • Vehicle Detection • Abnormal Sound Detection • Scene Change Detection
Basic Event	• Motion Detection (Enhanced with Human & Vehicle Classification for more accurate alerts) • Video Tampering Detection • Exception (Illegal Login) • Alarm Input Device
Alarm Linkage	• Memory Card Video Recording • Upload to FTP Server • Alarm Output Device • Push Notifications • Send to Alarm Server • Active Defence-Sound Alarm • Active Defence-Light Alarm • Email Alarm

INFRONT TECHNOLOGIES

Supplied by INFRONT TECHNOLOGIES

Phone 1300 736 970

sales@infronttech.com.au · infronttech.com.au

For more information call or email — Australia-wide sales, technical support and warranty service.

Deep Learning Function	
People & Vehicle Analytics	Search and filter to people or vehicle of interest based on many different attributes, making post-event search faster and easier.‡
Interface	
Network Interface	1 RJ45 10/100M Self-Adaptive Ethernet Port, PoE
On-board Storage	Built-In Memory Card Slot, Support MicroSD Card, up to 512 GB*
Built-in Speaker	Yes
Built-in Microphone	Yes; Records Anything Going on within a 16.4-ft (5 m) Radius of the Camera
Audio	1 Audio In, 1 Audio Out
Alarm	1 Alarm In, 1 Alarm Out Red-Blue Warning Lights
Reset Button	Yes
Power	DC Power Port
General	
Operating Temperature	-30 °C to 60 °C (-22 °F to 140 °F)
Storage Temperature	-40 °C to 60 °C (-40 °F to 140 °F)
Operating Humidity	95% or Less (Non-Condensing)
Storage Humidity	95% or Less (Non-Condensing)
Package Contents	• VIGI Network Camera • Quick Start Guide • Waterproof Cable Attachments • Mounting Accessories
Power Supply	• 12V DC ± 5%, Max. 18W, 5.5 mm Coaxial Power Plug • PoE: 802.3at, Class 4, Max. 21W
Protection	IP67 Weatherproof, IK10 Vandal-Proof
Material	Metal
Net Weight	1.12 kg
Product Dimensions	10.5 × 4.6 × 3.5 in (266 × 116 × 90 mm)
Certifications	CE, NTRA, VCCI, KC, BSMI, FCC, IP67, IK10, ONVIF

INFRONT TECHNOLOGIES

Supplied by INFRONT TECHNOLOGIES

Phone 1300 736 970

sales@infronttech.com.au · infronttech.com.au

For more information call or email — Australia-wide sales, technical support and warranty service.

Dimensions

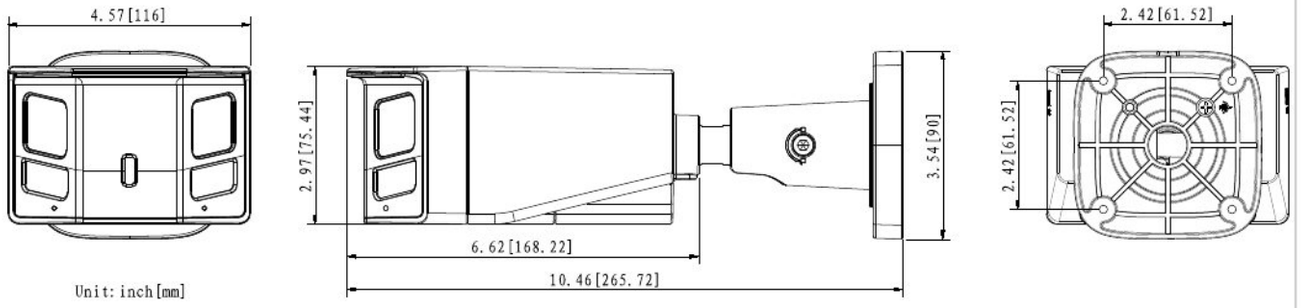

†Calculations are based on laboratory testing. Actual data is not guaranteed and will vary as a result of client limitations and environmental factors.

‡This feature must be used with VIGI specified software.

**This feature is in development and will update with future software iterations.

*The Micro SD card and pole mounting kits are not included in the package.

Specifications are subject to change without notice and can be found at **www.vigi.com**.

©2025 TP-Link

INFRONT TECHNOLOGIES

Supplied by INFRONT TECHNOLOGIES

Phone 1300 736 970

sales@infronttech.com.au · infronttech.com.au

For more information call or email — Australia-wide sales, technical support and warranty service.