Intelligent Solar Power Supply System

MODEL: VIGI SP6030



Supplied by INFRONT TECHNOLOGIES

Phone 1300 736 970

sales@infronttech.com.au · infronttech.com.au

For more information call or email — Australia-wide sales, technical support and warranty service.

Overview

With an efficient 60W solar panel and a 31.2Ah/10.8V high-capacity battery, this solar panel system delivers constant power to outdoor equipment such as network bridges and cameras. Perfect for areas where network and power deployment is tough, it eradicates wiring hassles and cuts investment costs.

Highlight

High-Efficiency Solar Panel

Improves the conversion efficiency of light with a Grade-A monocrystalline silicon solar panel, ensuring a long lifespan of at least 25 years.

Smart Battery Delivers Optimal Performance

The built-in smart battery supports intelligent auxiliary heating technology, which allows the battery to operate normally across a wide temperature range.

High System Stability, All-Weather Operation

The horizontal mount is made of high-quality SGCC galvanized steel with increased strength, anti-corrosion, and rust resistance. The solar panel is fringed with high-quality aluminum, and 3.2mm tempered glass covers the surface to increase impact resistance.

IP66 Weatherproof

Ensures reliable performance even in harsh environments with rain and dust, reducing subsequent maintenance costs.

Remote Management

Monitor power statistics, get instant intrusion and low-battery alerts, update firmware, and reboot the system via the mobile app. The smart controller conducts real-time self-diagnostics and auto-restarts upon detecting faults, eliminating manual onsite troubleshooting. Enjoy peace of mind, no matter your location.

INFRONT TECHNOLOGIES

Supplied by INFRONT TECHNOLOGIES

Phone 1300 736 970

sales@infronttech.com.au · infronttech.com.au

For more information call or email — Australia-wide sales, technical support and warranty service.

Network Topology

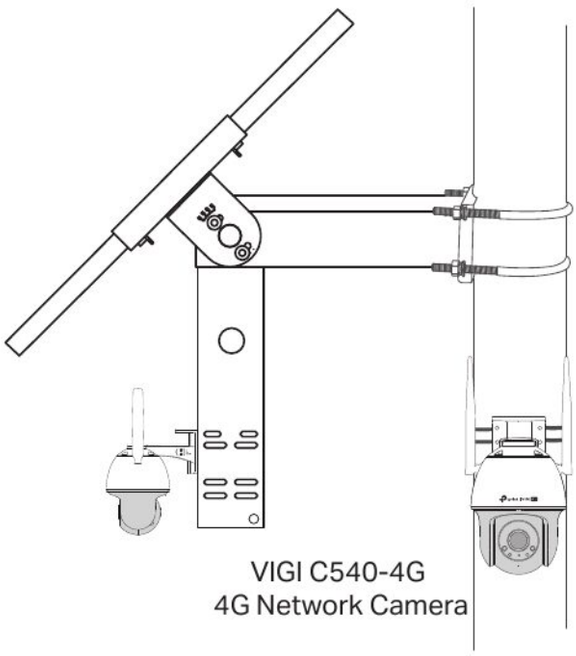

VIGI C540-4G
4G Network Camera

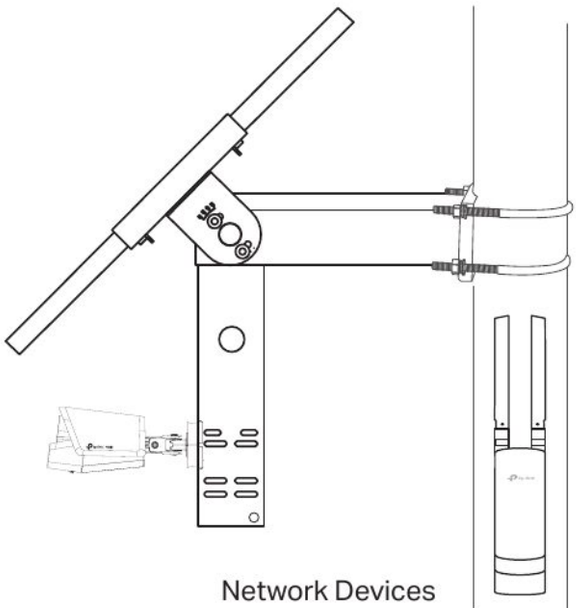

Network Devices
(such as wireless access
points, network bridges, etc.)

INFRONT TECHNOLOGIES

Supplied by INFRONT TECHNOLOGIES

Phone 1300 736 970

sales@infronttech.com.au · infronttech.com.au

For more information call or email — Australia-wide sales, technical support and warranty service.

Specifications

Intelligent Solar Power Supply System	
Product Model	VIGI SP6030
Solar Panel (Photovoltaic Panel)	
Power	60W
Voltage	18V
Dimension	690×516×30 mm (27.2×20.3×1.2 in)
Angle Adjustment (Manual)	
Angle Adjustment (Manual)	5°/15°/25°/35°/45°/55°
Battery	
Type	Lithium
Intelligent Auxiliary Heat	Yes
Voltage	10.8V
Capacity	31.2Ah
Max. Output Voltage	12.6V
Life	More than 500 cycles
Dimension	242×70×65 mm (9.5×2.8×2.6 in)
Charging Condition	0°C~45°C -30°C~45°C (With intelligent auxiliary heating)
Discharging Condition	-20°C~60°C -30°C~60°C (With intelligent auxiliary heating)
Indicator LED	
Quantity	4
Color	Blue
Description	1*SYS Indicator 1*LAN Indicator 1*PV Indicator 1*BAT Indicator
Interface	
Interface	1*10/100M RJ45, 1*Photovoltaic Panel Connector
Load Interface	#1, #2: 9V-12.6 VDC/2A, #3: 12 VDC/2A 3* 5.5mm DC Power Plugs

INFRONT TECHNOLOGIES

Supplied by INFRONT TECHNOLOGIES

Phone 1300 736 970

sales@infronttech.com.au · infronttech.com.au

For more information call or email — Australia-wide sales, technical support and warranty service.

Software Feature	
Load Control	Yes
High and Low Temperature Protection	Yes
Overdischarge Protection	Yes
Power Consumption Statistics	Yes
Displays Real-time Load Status	Yes
Battery Level Display	Yes
Time Zone Selection	Yes
Region Selection	Yes
Schedule Saving	Yes
Firmware Remote Update	Yes
Remote Reboot	Yes
Local LAN Management	Yes
Smart Charging control	-30°C-5°C
Account Management	Yes
Remote Reset	Yes
Remote Message Push	Yes
General	
Certification	CB, PSE (Battery) CE, FCC, VCCI, IC, IP66
Compatible Pole Diameter	Ø3.1-4.7 in (Ø80-120 mm)
Operating Temperature	-30°C-60°C (With intelligent auxiliary heating)
Operating Humidity	10%~90%RH, Non-condensing
Package Size	800×615×225 mm (31.5×24.2×8.9 in)
Weight	14kg
Package weight	15.5kg
Package Contents	Quick Start Guide Waterproof Cable Attachments Mounting Accessories
Dimensions	

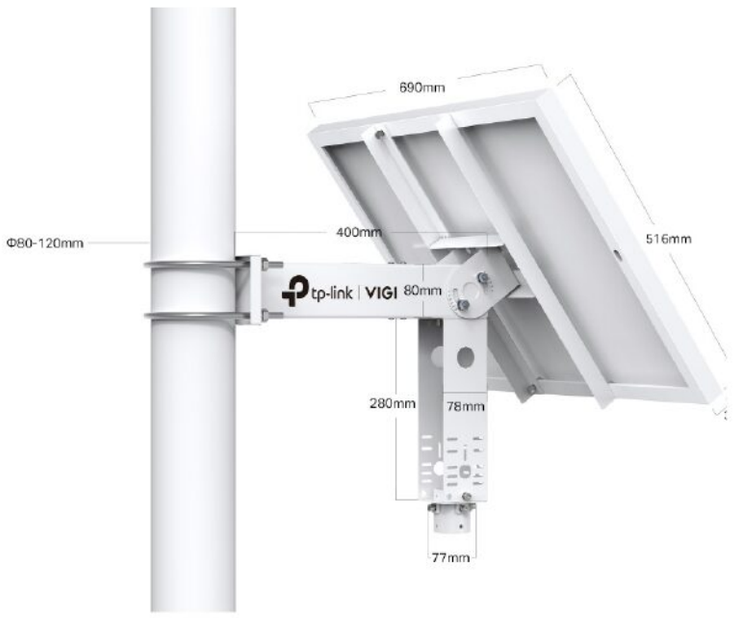

INFRONT TECHNOLOGIES

Supplied by INFRONT TECHNOLOGIES

Phone 1300 736 970

sales@infronttech.com.au · infronttech.com.au

For more information call or email — Australia-wide sales, technical support and warranty service.