tp-link | VIGI

Network Camera Junction Box

MODEL: VJB-300



INFRONT TECHNOLOGIES

Supplied by INFRONT TECHNOLOGIES

Phone 1300 736 970

sales@infronttech.com.au · infronttech.com.au

For more information call or email — Australia-wide sales, technical support and warranty service.

Features

- Practical Design for Hiding Cables
- Aluminum Alloy Build with Waterproof Capabilities
- Compatible with All VIGI Cameras
- Easy to Install
- Suitable for Indoor or Outdoor Wall / Ceiling Mounting

Specifications

Appearance	VIGI White / VIGI Black
Material	Aluminum Alloy
Weight	0. 37 Kg
Product Dimensions (W × D × H)	Body: Ø4.92 × 1.81 in (125 × 45.85 mm) Overall: 4.92 × 5.13 × 1.81 in (125 × 130.4 × 45.85 mm) (includes wire outlet)
Package Contents	• Junction Box • Mounting Accessories • Waterproof Accessories • Installation Guide
Dimension	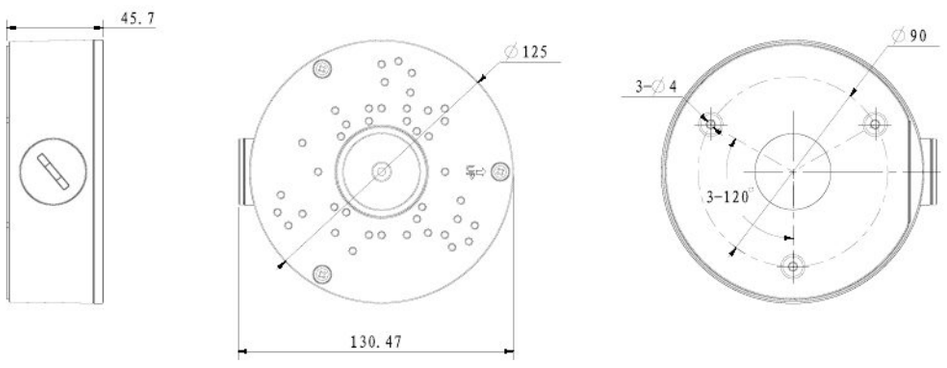

www.vigi.com

Specifications are subject to change without notice. All brands and product names are trademarks or registered trademarks of their respective holders. © 2026 TP-Link

tp-link

INFRONT TECHNOLOGIES

Supplied by INFRONT TECHNOLOGIES

Phone 1300 736 970

sales@infronttech.com.au · infronttech.com.au

For more information call or email — Australia-wide sales, technical support and warranty service.