VIGI by tp-link

Datasheet
Security Never Shuts Down

Network Camera Junction Box

MODEL: VJB-305



tp-link

INFRONT TECHNOLOGIES

Supplied by INFRONT TECHNOLOGIES
Phone 1300 736 970
sales@infronttech.com.au · infronttech.com.au
For more information call or email — Australia-wide sales, technical support and warranty service.

Features

- Practical Design for Hiding Cables
- Aluminum Alloy Build with Waterproof Capabilities
- Compatible with Specific Dome/Bullet/Turret Cameras*
- Easy to Install
- Suitable for Indoor or Outdoor Wall / Ceiling Mounting

Specifications

Appearance	VIGI White
Material	Aluminum Alloy
Weight	416g
Product Dimensions (L × W × H)	6.1 × 5.9 × 2.0 in (155.56 × 150 × 51 mm)
Package Contents	Junction Box, Mounting Accessories, Waterproof Accessories
Dimension	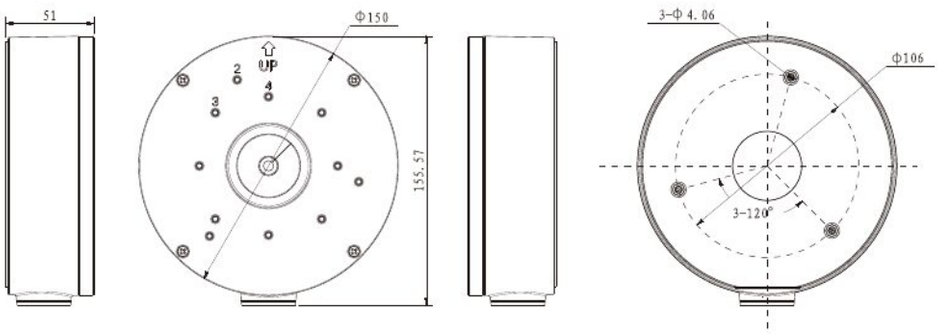

www.vigi.com

*Visit https://www.vigi.com/en/vigi-accessories/product-list/ for the compatible device list.

Specifications are subject to change without notice. All brands and product names are trademarks or registered trademarks of their respective holders. © 2025 TP-Link

INFRONT TECHNOLOGIES

Supplied by INFRONT TECHNOLOGIES

Phone 1300 736 970

sales@infronttech.com.au · infronttech.com.au

For more information call or email — Australia-wide sales, technical support and warranty service.