170m Infrared Illuminator

Model: VSIR28W30D

Product Overview

High-performance IR illuminator for all lighting conditions. The VSIR28W30D has 12pcs high power IR LED with 170m IR distance. It is IP66 rated with tempered glass panel and aluminum die-casting housing, suitable for indoor or outdoor use.



Model: VSIR28W30D	
LED Type	12pc high power IR LED
IR Distance	170m
Beam Angle	30°
Day / Night	Auto switch
Ingress Protection	IP66
Power Input	12VDC
Power Consumption	28W
Dimensions (WxDxH)	221x90x232mm
Weight	1.7KG
Operating Environment	-30° ~ 50°C

Product specifications and images are subject to change.

Illuminator Compatibility

This illuminator is compatible with most camera range including: VIP Vision, Securview, Securview Victory Series and Watchguard.

Product Diagram

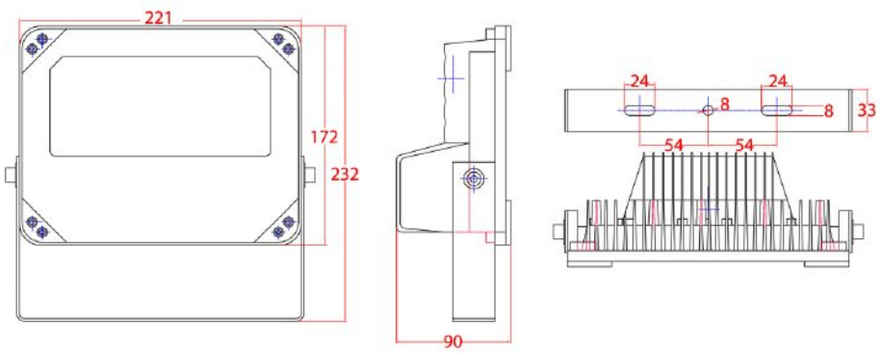

Your professional CCTV surveillance dealer:

INFRONT TECHNOLOGIES

Supplied by INFRONT TECHNOLOGIES

Phone 1300 736 970

sales@infronttech.com.au · infronttech.com.au

For more information call or email — Australia-wide sales, technical support and warranty service.