Right Angle Wall Mount Camera Bracket

Model: VSBKTB2204W (White) / VSBKTB2204W-B (Black)

Technical Specifications

Powder coated aluminium right angle wall mount bracket for surveillance cameras.

Model	VSBKTB2204W / VSBKTB2204W-B
Materials	Aluminium Alloy and SECC material
Load Bearing Capacity	1.00kg
Pipe Thread	N/A
Operating Conditions	-40° ~ 60°C / 90% RH (max)
Weather Resistance	N/A
Dimensions	162 x 129.4 x 80mm
Weight	0.57kg



Product specifications and bracket compatibility are subject to change.

Product Diagrams & Dimensions

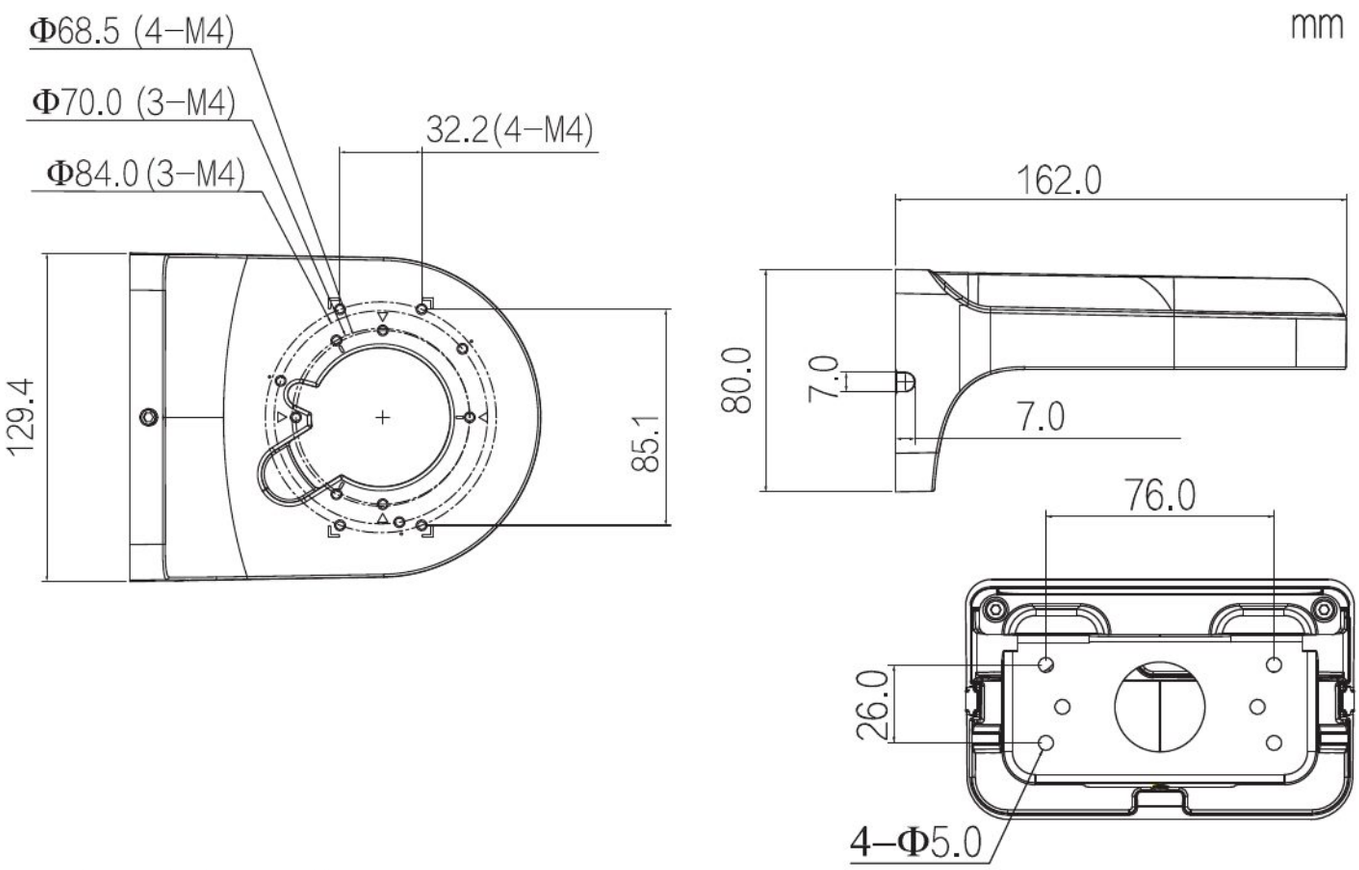

Your professional CCTV surveillance dealer:

INFRONT TECHNOLOGIES

Supplied by INFRONT TECHNOLOGIES

Phone 1300 736 970

sales@infronttech.com.au · infronttech.com.au

For more information call or email — Australia-wide sales, technical support and warranty service.