DH-PFM976-631-PT

UTP CAT6 15U" Pass Through RJ45 Connector



- Unshielded CAT6 RJ-45 connector.
- Designed with a through hole for cables to be fed through.
- Built with trident brass sheet and 15U" gold plating.
- Lifespan of 750 cycles.

Technical Specification

Material

Material	PC + brass
Gold Plating Thickness	15U"
Flammability Rating	UL94V-2

Electrical

Operating Voltage	150 VAC RMS
Operating Current	1.5 AMP
Contact Resistance	≤ 20 mΩ
Insulation Resistance	≥1000 MΩ@500 VDC
Withstands Voltage between Terminals	1000 VDC/VAC PEAK @0.5 mA 50 Hz or 60 Hz 1 Minute

Mechanical

Retention Strength	50 N for 60 s ± 5 s
Lifespan	750 times
Insertion Force	≤ 30 N

Environmental

Operating Temperature	–25 °C to +55 °C (–13 °F to +131 °F)
Storage Temperature	–10 °C to +40 °C (+14 °F to +104 °F)
Storage Humidity	< 80%
Storage Time	12 months

Structural

Single Strand Cable Diameter	21 AWG–23 AWG
Single Strand Insulated Cable Diameter	1.09 mm–1.20 mm (0.043"–0.047")
Outer Sheath Diameter	≤ 6.4 mm (0.25")
Packaging Dimensions	120 mm × 65 mm × 90 mm (4.72" × 2.55" × 3.54")
Transport Package Dimensions	500 mm × 350 mm × 270 mm (19.69" × 13.78" × 10.63")
Packaging Method	100 pcs in 1 carton, and 50 cartons in 1 package
Net Weight	0.14 kg (0.31 lb)
Gross Weight	0.18 kg (0.40 lb)

Ordering Information

Type	Model	Description
Cabling Accessory Series	DH-PFM976-631-PT	UTP CAT6 15U" Pass Through RJ45 Connector

Dimensions (mm [inch])

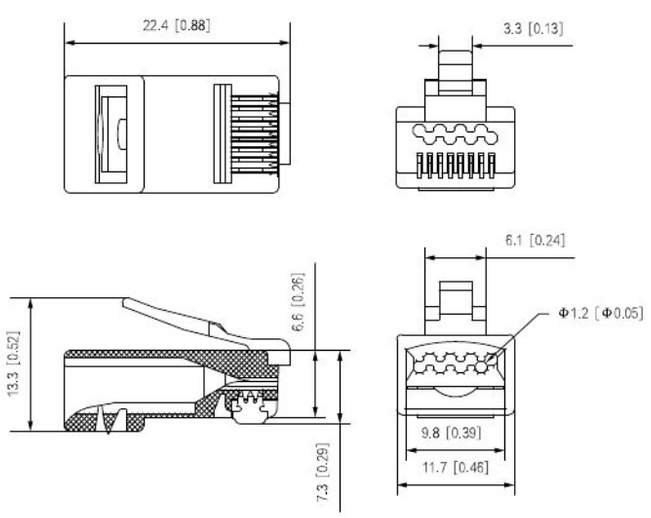

Rev 002.000 © 2022 Dahua. All rights reserved. Design and specifications are subject to change without notice.
The images, specifications and information mentioned in the document are only for reference, and might differ from the actual product.

INFRONT TECHNOLOGIES

Supplied by INFRONT TECHNOLOGIES

Phone 1300 736 970

sales@infronttech.com.au · infronttech.com.au

For more information call or email — Australia-wide sales, technical support and warranty service.