Triple Clamp Pole Mount Camera Bracket

Model: VSBKTA150

Technical Specifications

Heavy duty coated SECC pole mount bracket for large surveillance cameras with three clamps.



Model	VSBKTA150
Materials	SECC
Dimensions	130 x 170 x 45mm
Pipe Thread	N/A
Operating Conditions	-40° ~ 60°C / 90% RH (max)
Load Bearing Capacity	10.00kg
Weather Resistance	N/A
Weight	1.00kg

Product specifications and bracket compatibility are subject to change.

Bracket Compatibility

This bracket is compatible with the following cameras from VIP Vision and/or Securview Victory Series.

VIP Vision™ IP Surveillance Cameras
Directly compatible with VSIP3/5MPFBIRM/V2. Compatible with VSIP1/3MPPTZIR via included wall mount brackets.

Securview Victory Series™ HD Over Coax Cameras
No compatible models.

Product Diagrams

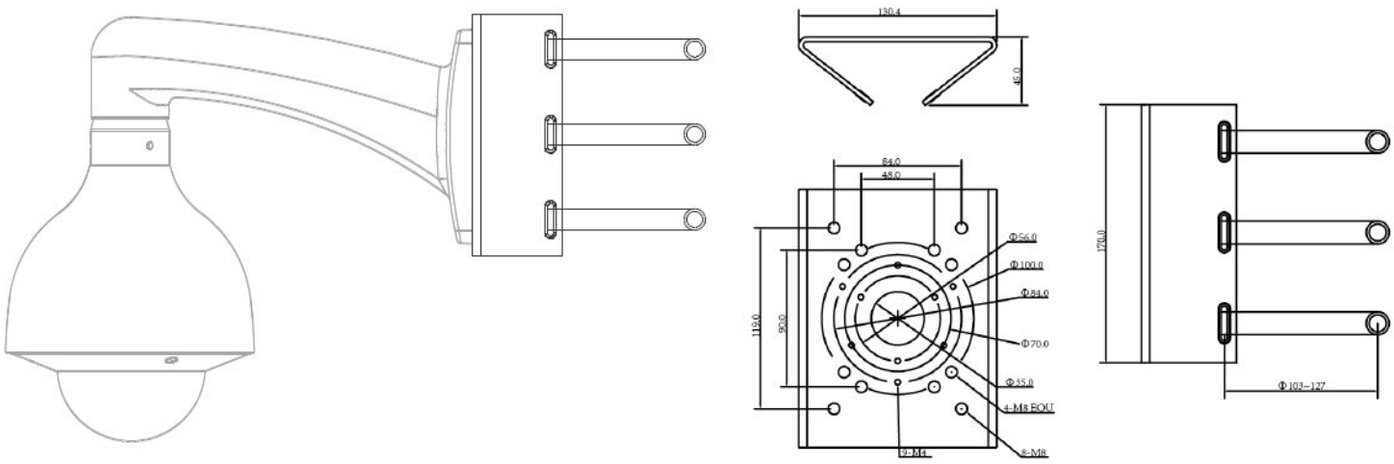

Your professional CCTV surveillance dealer:

Supplied by INFRONT TECHNOLOGIES

Phone 1300 736 970

sales@infronttech.com.au · infronttech.com.au

For more information call or email — Australia-wide sales, technical support and warranty service.