# VTM115

## VTM115+Surface mounted Box



- Material:AL5052 t=2.0mm
- Dimensions: 129.0mm×95.0mm×28.5mm (5.08"×3.74"×1.12")

### Installation

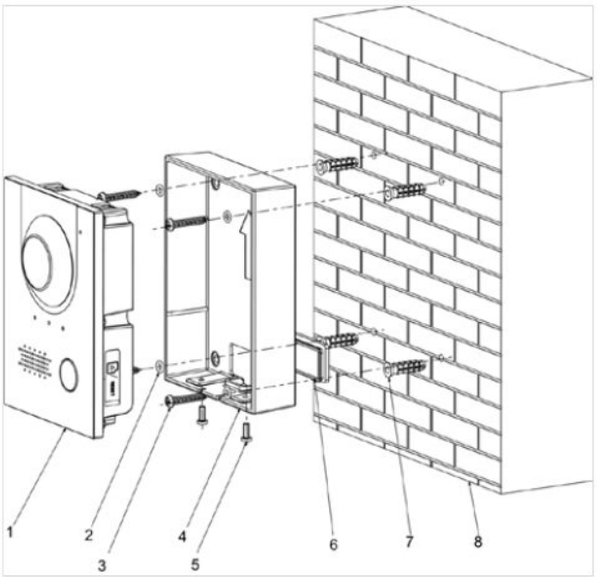


**Step1** With the help of installation diagram, hammer four expansion screws into the wall.

**Step2** Install the waterproof silica gel pad on the mounting box from the back of the mounting box.

**Step3** Put four waterproof rings on four ST4×25 self-tapping screws.

**Step4** Install the mounting box on the wall by screw the four ST4×25 self-tapping screws into the expansion screws.

**Step5** Put the VTO into the mounting box.

**Step6** Fix the VTO to the mounting box by screwing two M3×8 screws from the bottom of the mounting box.

### Dimensions (mm[inch])

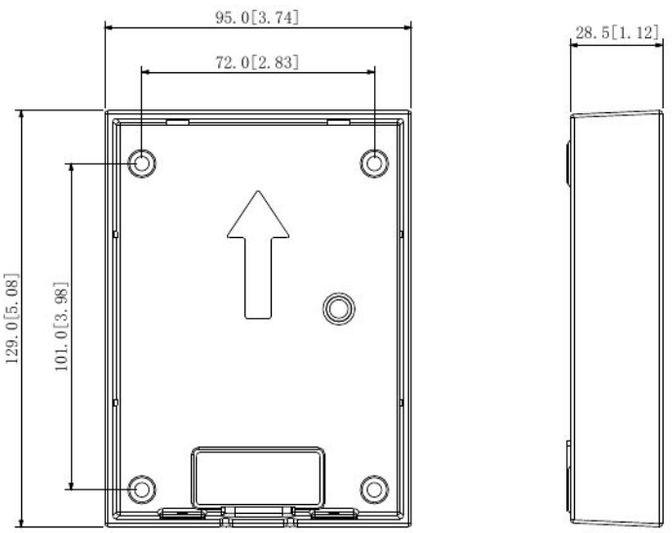


Rev 001.001

© 2019 Dahua. All rights reserved. Design and specifications are subject to change without notice.
Pictures in the document are for reference only, and the actual product shall prevail.



INFRONT TECHNOLOGIES

**Supplied by INFRONT TECHNOLOGIES**

**Phone 1300 736 970**

sales@infronttech.com.au · infronttech.com.au

*For more information call or email — Australia-wide sales, technical support and warranty service.*