# DHI-KTP03

## IP Video Intercom KIT



**IP Villa Door Station**

- Megapixel image sensor
- Supports IR illumination and night vision.
- Two-way audio and voice call through app.
- Can be managed through the management platform; supports voice call between App and the door station.
- Card unlock, unlock on the indoor monitor, and remote unlock through the App.
- Supports IP65 (Silicone sealant is needed.
- For details, see the quick start guide.)
- Supports 10000 cards.
- Supports standard PoE power supply.
- Controls two locks.

**IP Indoor Monitor**

- 7" TFT capacitive touch screen, 1024 × 600.
- 6-channel alarm input and 1-channel alarm output.
- Standard PoE.
- Door station and IPC monitor.
- H.265 and H.264 video decoding.
- High performance & cost-effective.




| Technical Specification | |
|---|---|
| Model | DHI-VTO2111D-P-S3 |
| **System** | |
| Main Processor | Embedded Processor |
| Operating System | Embedded Linux OS |
| Button Type | Mechanical |
| Interoperability | ONVIF; CGI |
| Network Protocol | SIP; P2P; IPv4; DNS; RTSP; RTP; TCP; UDP |
| **Basic** | |
| Camera | 1/2.8" 2 MP CMOS high definition, low illumination/ DWDR/ color/IR |
| Field of View | H: 107°; V: 60°; D: 122° |
| Noise Reduction | 3D NR |
| Video Compression | H.264; H.265 |
| Video Resolution | Main stream: 720p, WVGA, D1, CIF<br>Sub stream: 1080p, WVGA, D1, QVGA, CIF |
| Video Frame Rate | PAL: 25 fps;<br>NTSC: 30 fps |
| Video Bit Rate | 256 Kbps–8 Mbps |
| Light Compensation | Auto IR |
| Day/Night | Auto(ICR)/Color/B/W;Color/B/W |
| Audio Compression | G.711a; G.711u; PCM |
| Audio Input | 1 |
| Audio Output | Built-in speaker |
| Audio Mode | Two-way audio |
| Audio Enhancement | Echo suppression/digital noise reduction |
| Audio Bit Rate | 16 KHz, 16 bit |
| **Function** | |
| Communication Mode | Full digital |
| Unlock Mode | Card; app; indoor monitor |
| Card Type | IC card |
| Leave Videos | Yes (SD card inserted in VTH is needed) |
| Web Configuration | Yes |
| **Performance** | |
| Card Reading Distance | 0 cm–4.5 cm (0"–1.77") |
| Issue Card Locally | Yes |
| Casing Material | PC + Acrylic |
| **Capacity** | |
| Card Capacity | 10000 |
| **Port** | |
| RS-485 | 1 |
| Power Output | 1 port, 12 V and 200 mA |
| Exit Button | 1 |
| Door Status Detection | 1 |



INFRONT TECHNOLOGIES

**Supplied by INFRONT TECHNOLOGIES**

**Phone 1300 736 970**

sales@infronttech.com.au · infronttech.com.au

*For more information call or email — Australia-wide sales, technical support and warranty service.*

| | |
|---|---|
| Lock Control | 1 port, normally closed by default |
| Network Port | 1 × 10/100 Mbps network port (8-core white ribbon cable) |

### Alarm

| | |
|---|---|
| Tamper Alarm | Yes |

### General

| | |
|---|---|
| Appearance Color | Black |
| Power Supply | 12 VDC, 1 A<br>Standard PoE |
| Power Adapter | Optional |
| Installation | Surface Mount |
| Certifications | CE |
| Accessory | Included: Alarm power ribbon cable, rain cover, brackets |
| Product Dimensions | 135.1 mm × 70.6 mm × 34.6 mm (5.32" × 2.78" × 1.36") |
| Protection | IP65 (silicone sealant is needed, see the quick start guide.) IK04 (for common use) |
| Operating Temperature | –30 °C to +60 °C (–22 °F to +140 °F) |
| Operating Humidity | 10%–90% (RH), non-condensing |
| Operating Altitude | Beneath 3000 m (9842.52 ft) |
| Operating Environment | Outdoor |
| Power Consumption | ≤ 1 W (standby), ≤ 5 W (working) |
| Gross Weight | 326 g (0.72 lb) |
| Anti-corrosion Level | Basic Protection |

| | |
|---|---|
| Model | DHI-VTH2621G-P |

### System

| | |
|---|---|
| Main Processor | Embedded Processor |
| Operating System | Embedded LINUX OS |

### Basic

| | |
|---|---|
| Screen Type | Capacitive Touchscreen |
| Display Screen | 7" TFT |
| Screen Resolution | 1024 (H) × 600 (V) |
| Audio Compression | G.711a; G.711u; PCM |
| Audio Input | 1 |
| Audio Output | Built-in speaker |
| Audio Mode | Two-way voice talk |
| Audio Enhancement | Echo suppression |
| Audio Bit Rate | 16 KHz; 16 bit |

### Function

| | |
|---|---|
| Communication Mode | Full digital |
| Information Release | Receive and view text information released by the management center |
| Leave Videos | Yes (an SD card inserted in VTH is needed) |
| DND Mode | Do not disturb period can be set;Do not disturb mode can be set |
| Number of Extensions | Villa: 9:<br>Apartment: 4 |
| Storage | Micro SD Card, Max 64 GB (reserved for software) |

### Port

| | |
|---|---|
| Alarm Input | 6 |
| Alarm Output | 1 |
| Network Port | 1 × 10/100 Mbps Ethernet port |

### Performance

| | |
|---|---|
| Casing Material | PC + ABS |

### General

| | |
|---|---|
| Appearance Color | Black |
| Power Supply | 12 VDC, 1 A<br>Standard PoE |
| Installation | Surface Mount |
| Accessory | Bracket (included)<br>Alarm ribbon cable (included) |
| Product Dimensions | 189.6 mm × 134.6 mm × 26.0 mm (7.46" × 5.30" × 1.02") |
| Operating Temperature | –10°C to +55°C (+14°F to +131°F) |
| Operating Humidity | 10%–95% (RH), non-condensing |
| Power Consumption | Standby ≤ 2 W; working ≤ 6 W |
| Gross Weight | 575 g (1.27 lb) |
| Storage Temperature | Basic Protection |

| | |
|---|---|
| Model | DH-PFS3006-4ET-36 |

### System

| | |
|---|---|
| Main Processor | Embedded Processor |

### Port

| | |
|---|---|
| Network Port | 4 × PoE ports with 10/100 Mbps Base-TX<br>2 uplink ports with 10/100 Mbps Base-TX |

### General

| | |
|---|---|
| Appearance Color | Black |
| Certifications | CE; FCC |
| Product Dimensions | 194.0 mm × 108.1 mm × 35.0 mm (7.64" × 4.26" × 1.38") |
| Gross Weight | 0.56 kg (1.23 lb) |
| Anti-corrosion Level | Basic Protection |



INFRONT TECHNOLOGIES

**Supplied by INFRONT TECHNOLOGIES**

**Phone 1300 736 970**

sales@infronttech.com.au · infronttech.com.au

*For more information call or email — Australia-wide sales, technical support and warranty service.*

## Ordering Information

| Type | Model | Description |
|---|---|---|
| KIT | DHI-KTP03 | IP Video Intercom KIT |

## Installation

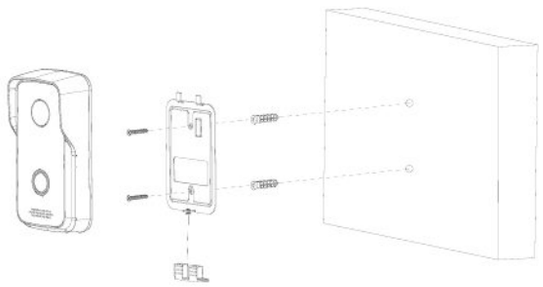

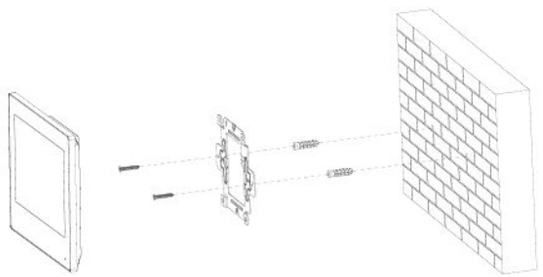

## Dimensions (mm[inch])

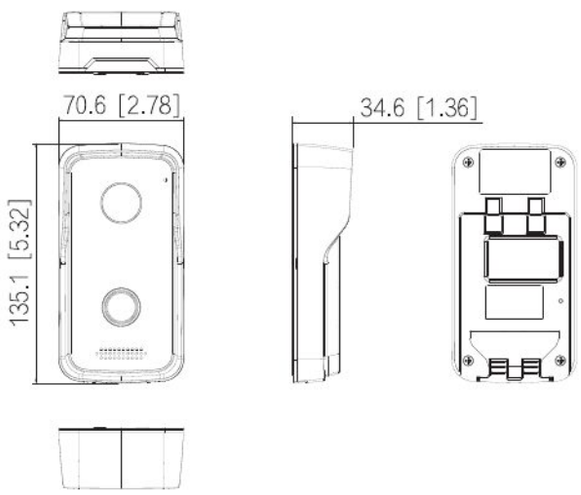


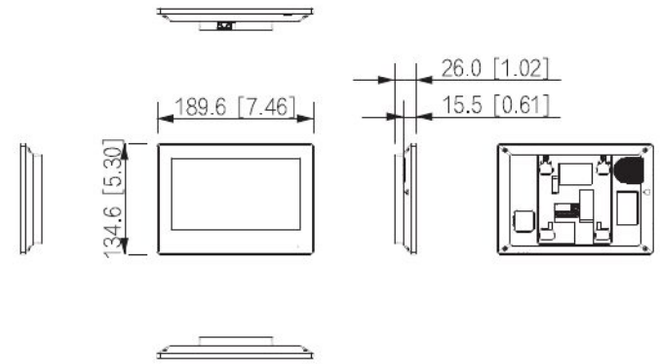


## Application




Rev 002.000 © 2024 Dahua. All rights reserved. Design and specifications are subject to change without notice.
The images, specifications and information mentioned in the document are only for reference, and might differ from the actual product.



INFRONT TECHNOLOGIES

**Supplied by INFRONT TECHNOLOGIES**

**Phone 1300 736 970**

sales@infronttech.com.au · infronttech.com.au

*For more information call or email — Australia-wide sales, technical support and warranty service.*