DH-IPC-HFW2831S-S-S2

8MP Lite IR Fixed-focal Bullet Network Camera



- 8MP, 1/2.7" CMOS image sensor, low illuminance, high image definition
- Outputs max. 8MP (3840 × 2160) @15 fps, and supports 2688×1520 (2688 × 1520) @25/30 fps
- H.265 codec, high compression rate, ultra-low bit rate
- Built-in IR LED, max IR distance: 30 m
- ROI, SMART H.264+/H.265+, flexible coding, applicable to various bandwidth and storage environments
- Rotation mode, WDR, 3D NR, HLC, BLC, digital watermarking, applicable to various monitoring scenes
- Intelligent detection: Intrusion, tripwire
- Abnormality detection: Motion detection, video tampering, no SD card, SD card full, SD card error, network disconnection, IP conflict, illegal access,voltage detection
- Supports max. 256 GB Micro SD card
- 12V DC/PoE power supply
- IP67 protection



Series Overview

With upgraded H.265 encoding technology, Dahua Lite series network camera has efficient video encoding capacity, which saves bandwidth and storage space. This camera adopts the latest starlight technology and displays better color image in the condition of low illumination. It supports SD card storage, dust-proof function, waterproof function and vandal-proof function, complying with the standards of IP67 (Supported by some select models).

Functions

Smart H.265+ & Smart H.264+

With advanced scene-adaptive rate control algorithm, Dahua smart encoding technology realizes the higher encoding efficiency than H.265 and H.264, provides high-quality video, and reduces the cost of storage and transmission.

WDR

With advanced Wide Dynamic Range (WDR) technology, Dahua network camera provides clear details in the environment of strong brightness contrast. The bright and dark area can get clear video even in high brightness environment or with backlight shadow.

Starlight

With advanced image processing technology and optical technology, Dahua Starlight technology can provide clear colorful video in the environment of low illuminance. It widely applies to various environments of low illuminance.

IVS

With advanced video algorithm, Dahua IVS technology supports intelligent functions, such as tripwire and intrusion.

Cyber Security

Dahua network camera is equipped with a series of key security technologies, such as security authentication and authorization, access control, trusted protection, encrypted transmission, and encrypted storage, which improve its security defense and data protection, and prevent malicious programs from invading the device.

Protection (IP67, wide voltage)

IP67: The camera passes a series of strict test on dust and soak. It has dust-proof function, and the enclosure can works normal after soaking in 1 m deep water for 30 minutes.

Wide voltage: The camera allows ±30% (for some power supplies) input voltage tolerance (wide voltage range), and it is widely applied to outdoor environment with instable voltage.

INFRONT TECHNOLOGIES

Supplied by INFRONT TECHNOLOGIES

Phone 1300 736 970

sales@infronttech.com.au · infronttech.com.au

For more information call or email — Australia-wide sales, technical support and warranty service.

Technical Specification

Camera

Image Sensor	1/2.7" 8Megapixel progressive CMOS
Max. Resolution	3840 (H) × 2160 (V)
ROM	128 MB
RAM	256 MB
Scanning System	Progressive
Electronic Shutter Speed	Auto/Manual 1/3 s–1/100,000 s
Min. Illumination	0.009 Lux@F2.0
S/N Ratio	>56 dB
Illumination Distance	30 m (98.43 ft)
Illuminator On/Off Control	Auto/Manual
Illuminator Number	1 (IR LED)
Pan/Tilt/Rotation Range	Pan: 0°–360° Tilt: 0°–90° Rotation: 0°–360°

Lens

Lens Type	Fixed-focal
Mount Type	M12
Focal Length	2.8 mm 3.6 mm
Max. Aperture	F2.0 F2.0
Field of View	2.8 mm: Horizontal 105° × Vertical 56° × Diagonal 125° 3.6 mm: Horizontal 87° × Vertical 47° × Diagonal 104°
Iris Type	Fixed
Close Focus Distance	2.8 mm: 1.0 m (3.3 ft) 3.6 mm: 1.9 m (6.2 ft)

	Lens	Detect	Observe	Recognize	Identify
DORI Distance	2.8 mm	74.7 m (245.1 ft)	29.9 m (98.1 ft)	14.9 m (48.9 ft)	7.5 m (24.6 ft)
	3.6 mm	106.7 m (350.1 ft)	42.7 m (140.1 ft)	21.3 m (69.6 ft)	10.7 m (35.1 ft)

Smart event

IVS	Tripwire; intrusion

Video

Video Compression	H.265; H.264; H.264B; MJPEG (only supported by the sub stream)
Smart Codec	Smart H.265+/ Smart H.264+
Video Frame Rate	Main stream: 3840 × 2160 (1 fps–15 fps) 2688 × 1520 (1 fps–25/30 fps) Sub stream: 704 × 576 (1 fps–25 fps) 704 × 480 (1 fps–30 fps)
Stream Capability	2 streams
Resolution	3840 × 2160 (3840 × 2160); 3072 × 2048 (3072 × 2048); 3072 ×1728 (3072 × 1728); 2592 × 1944 (2592 × 1944); 2688 × 1520 (2688 × 1520); 3M (2048 × 1536); 2304 × 1296 (2304 × 1296); 1080p (1920 × 1080); 1.3M (1280 × 960); 720p (1280 × 720); D1 (704 × 576/704 × 480); VGA (640 × 480); CIF (352 × 288/352 × 240)
Bit Rate Control	CBR/VBR
Video Bit Rate	H.264: 32 kbps–8192 kbps H.265: 12 kbps–8192 kbps
Day/Night	Auto(ICR)/Color/B/W
BLC	Yes
HLC	Yes
WDR	120 dB
White Balance	Auto/natural/street lamp/outdoor/manual/regional custom
Gain Control	Auto/Manual
Noise Reduction	3D NR
Motion Detection	OFF/ON (4 areas, rectangular)
Region of Interest(RoI)	Yes (4 areas)
Smart Illumination	Yes
Image Rotation	0°/90°/180°/270° (Supports 90°/270° with 3840 × 2160 resolution and lower.)
Mirror	Yes
Privacy Masking	4 areas

Alarm

Alarm Event	No SD card; SD card full; SD card error; network disconnection; IP conflict; motion detection; video tampering; tripwire; intrusion; illegal access; voltage detection; safety exception

Network

Network	RJ-45 (10/100 Base-T)
SDK and API	Yes
Cyber Security	Video encryption; firmware encryption; configuration encryption; Digest; WSSE; account lockout; security logs; IP/MAC filtering; generation and importing of X.509 certification; syslog; HTTPS; 802.1x; trusted boot; trusted execution; trusted upgrade
Protocol	IPv4; IPv6; HTTP; TCP; UDP; ARP; RTP ; RTSP; RTCP; RTMP; SMTP; FTP; SFTP; DHCP; DNS; DDNS; QoS; UPnP; NTP; Multicast; ICMP; IGMP; NFS; PPPoE; Bonjour
Interoperability	ONVIF(Profile S/Profile G/Profile T); CGI; P2P; Milestone; Genetec
User/Host	20
Storage	FTP; SFTP; Micro SD Card (support max. 256 GB); NAS
Browser	IE Chrome Firefox

INFRONT TECHNOLOGIES

Supplied by INFRONT TECHNOLOGIES

Phone 1300 736 970

sales@infronttech.com.au · infronttech.com.au

For more information call or email — Australia-wide sales, technical support and warranty service.

Management Software	Smart PSS; DSS; DMSS
Mobile Phone	IOS; Android

Certification

Certifications	CE-LVD: EN62368-1 CE-EMC: Electromagnetic Compatibility Directive 2014/30/EU FCC: 47 CFR FCC Part 15, Subpart B UL/CUL: UL60950-1 CAN/CSA C22.2 No.60950-1-07

Power

Power Supply	12V DC/PoE (802.3af)
Power Consumption	< 5.5W

Environment

Operating Conditions	–40°C to +60°C (–40°F to +140°F)/less than ≤ 95% RH
Storage Temperature	–40°C to +60°C (–40°F to +140°F)
Protection Grade	IP67

Structure

Casing	Metal
Dimensions	166.2 mm × Φ70 mm (6.54" × Φ2.76")
Net Weight	0.48 kg (1.1 lb)
Gross Weight	0.57 kg (1.3 lb)

Accessories

Optional:



PFA134
Junction Box



PFA152-E
Pole Mount



PFM321D
DC12V1A
Power Adapter



LR1002-1ET/1EC
Single-port Long Reach Ethernet over Coax Extender



PFM900-E
Integrated Mount Tester



PFM114
TLC SD Card

Pole Mount	Junction Mount
PFA134+PFA152-E	PFA134
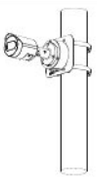	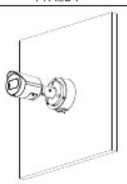

Ordering Information

Type	Part Number	Description
8MP Camera	DH-IPC-HFW2831SP-S-S2	8MP Lite IR Fixed-focal Bullet Network Camera,PAL
	DH-IPC-HFW2831SN-S-S2	8MP Lite IR Fixed-focal Bullet Network Camera,NTSC
Accessories (optional)	PFA134	Junction Box
	PFA152-E	Pole Mount
	PFM321D	DC12V1A Power Adapter
	LR1002-1ET/1EC	Single-port Long Reach Ethernet over Coax Extender
	PFM900-E	Integrated Mount Tester
	PFM114	TLC SD Card

Dimensions (mm[inch])

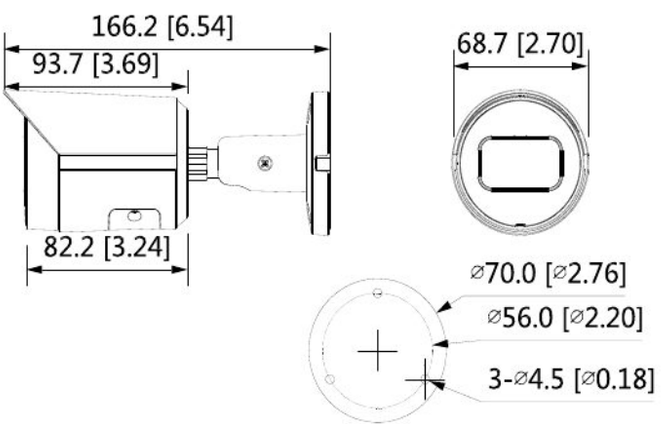

Rev 001.001 © 2020 Dahua. All rights reserved. Design and specifications are subject to change without notice.
Pictures in the document are for reference only, and the actual product shall prevail.

INFRONT TECHNOLOGIES

Supplied by INFRONT TECHNOLOGIES

Phone 1300 736 970

sales@infronttech.com.au · infronttech.com.au

For more information call or email — Australia-wide sales, technical support and warranty service.