PFH101

Rack Mount Tray



Features

- Material: SPCC
- High compatibility for standard storage device
- 19” standard rack mount tray

Supplied by INFRONT TECHNOLOGIES

Phone 1300 736 970

sales@infronttech.com.au · infronttech.com.au

For more information call or email — Australia-wide sales, technical support and warranty service.

Technical Specification

Model	DH-PFH101
General	
Material	SPCC
Dimension(WxDxH)	482.6mmx281.2mmx43.7mm (19"x11.07"x1.72")
Weight	1.4kg (3.09lb)
Load Bearing	5kg (11.02lb)
Color	Black
Operating Temperature	-40℃~+60℃(-40℉~+140℉)
Humidity	<90% RH
Applicable Model	1U/ Mini 1U/Compact 1U Storage Device

Order Information

Type	Part Number	Description
Cabinet	DH-PFC200-6U4D	19" 6U rock cabinet, depth 450mm, load bearing 40kg, support wall & plane mount
	DH-PFC200-6U6D	19" 6U rock cabinet, depth 600mm, load bearing 40kg, support wall & plane mount
	DH-PFC200-12U6D	19" 12U rock cabinet, depth 600mm, load bearing 80kg (shaft: 40kg), support wall & plane mount
	DH-PFC200-12U8D	19" 12U rock cabinet, depth 800mm, load bearing 80kg (shaft: 40kg), support wall & plane mount
	PFC200-6U4D	19" 6U rock cabinet, depth 450mm, load bearing 40kg, support wall & plane mount
	PFC200-6U6D	19" 6U rock cabinet, depth 600mm, load bearing 40kg, support wall & plane mount
	PFC200-12U6D	19" 12U rock cabinet, depth 600mm, load bearing 80kg (shaft: 40kg), support wall & plane mount
	PFC200-12U8D	19" 12U rock cabinet, depth 800mm, load bearing 80kg (shaft: 40kg), support wall & plane mount
Tray	PFC610	19" rackmount tray
	PFH101	**19" rackmount tray**
PDU	ZZM10/PDU(8 European 250)	8 Outlet rackmount PDU power strip, max. AC250V rated input, 16A/max. 4000W output, European
	ZZM10/PDU(8 British 250)	8 Outlet rackmount PDU power strip, max. AC250V rated input, 13A/max. 3250W output, British
	ZZM10/PDU(8 USA 250)	8 Outlet rackmount PDU power strip, max. AC250V rated input, 10A/max. 2500W output, North American plug input/ universal output
Fan	AA1252MB-AT	Rackmount cooling fan, AC220V input, 2200~2300 RPM
	AA1251MB-AT	Rackmount cooling fan, AC110V input, 2200~2300 RPM
Caster wheel	PFC650B-60	Caster wheel, steel&PU, each load bearing 60kg

INFRONT TECHNOLOGIES

Supplied by INFRONT TECHNOLOGIES

Phone 1300 736 970

sales@infronttech.com.au · infronttech.com.au

For more information call or email — Australia-wide sales, technical support and warranty service.

Dimensions (mm/inch)

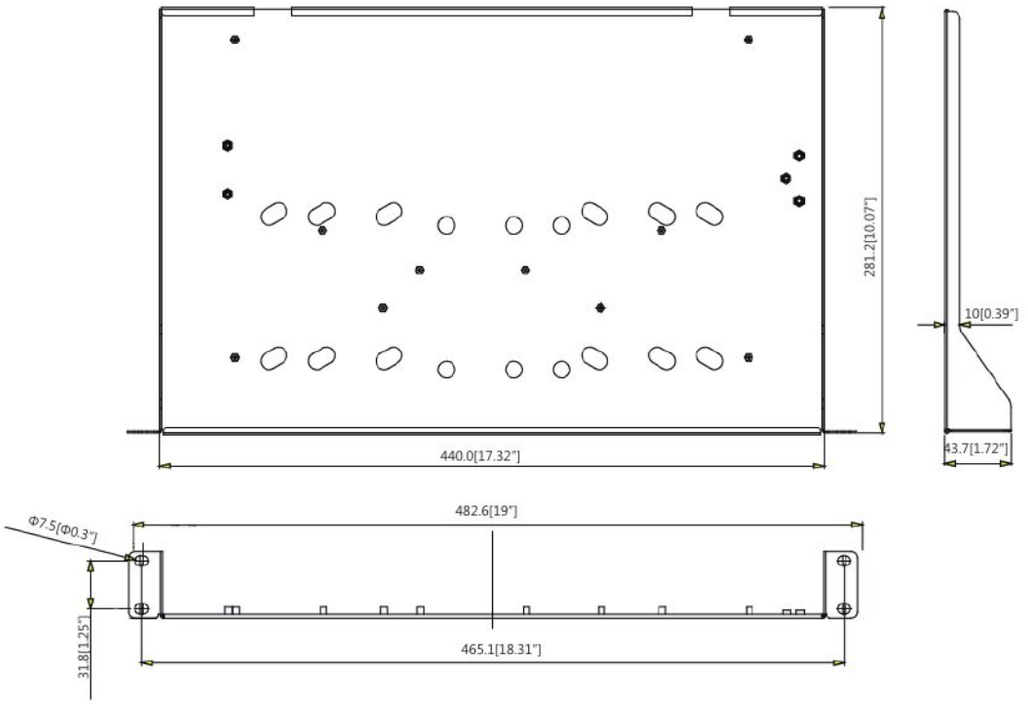

Application

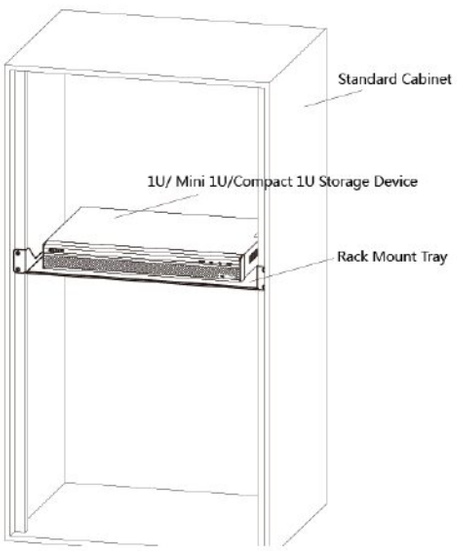

Package Information

- 19" standard rack mount tray *1
- Layer *1
- M2.5 screw *2
- M3 *5
- User manual *1

Rev 001.001 © 2018 Dahua. All rights reserved. Design and specifications are subject to change without notice.

INFRONT TECHNOLOGIES

Supplied by INFRONT TECHNOLOGIES

Phone 1300 736 970

sales@infronttech.com.au · infronttech.com.au

For more information call or email — Australia-wide sales, technical support and warranty service.