DH-PFA124

Water-proof Junction Box



· Built of aluminum alloy.
· Neat and integrated design.
· IP66 junction box.
· Contains cable outlets on its bottom and sides to make wiring more convenient.



Series Overview

Dahua Junction Box is beautifully designed and highly convenient. Cables can be organized in it and there are outlets at the bottom and side of the box, making it easy to install and use.

Technical Specification

Structure

Casing Material	Aluminum alloy
Product Dimensions	134.0 mm × 133.4 mm × 52.0 mm (5.28" × 5.25" × 2.05") (L × W × H)
Appearance Color	White
Net Weight	0.54 kg (1.19 lb)
Gross Weight	0.65 kg (1.43 lb)
Load Bearing	3.0 kg (6.61 lb)
Installation	Junction mount
Screw Thread Type	G3/4
Applicable Model	Please see "Camera Accessories Selection"
Packaging Dimensions	146.0 mm × 65.0 mm × 147.0 mm (5.75" × 2.56" × 5.79") (L × W × H)

Environment

Protection	IP66
Operating Temperature	–40 °C to +60 °C (–40 °F to +140 °F)
Operating Humidity	<90% (RH)
Storage Temperature	–40 °C to +60 °C (–40 °F to +140 °F)
Storage Humidity	10%–90% (RH)
Anti-corrosion Level	Basic protection

Ordering Information

Type	Model	Description
Camera Mount	DH-PFA124	Water-proof Junction Box

Installation

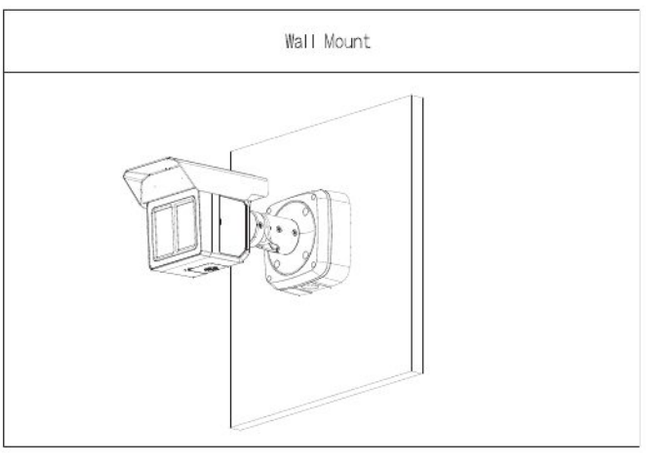

INFRONT TECHNOLOGIES

Supplied by INFRONT TECHNOLOGIES

Phone 1300 736 970

sales@infronttech.com.au · infronttech.com.au

For more information call or email — Australia-wide sales, technical support and warranty service.

Dimensions (mm[inch])

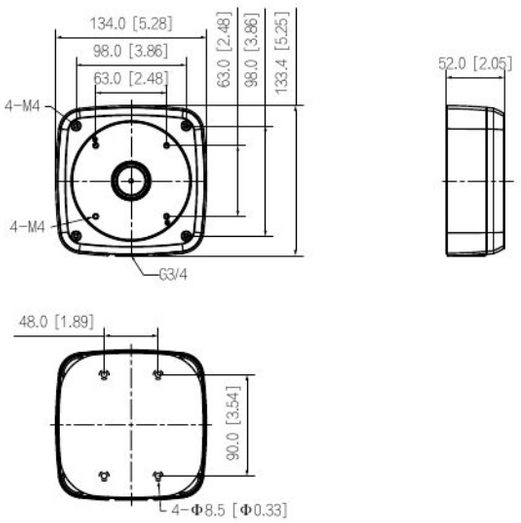

Package Information

- Water-proof Junction Box × 1
- M4×10 screw × 4
- S3.0 wrench × 1
- ST6 screw × 4
- Plastic expansion bolt × 4
- Flat Washer × 4

Rev 002.000 © 2024 Dahua. All rights reserved. Design and specifications are subject to change without notice.
The images, specifications and information mentioned in the document are only for reference, and might differ from the actual product.

INFRONT TECHNOLOGIES

Supplied by INFRONT TECHNOLOGIES

Phone 1300 736 970

sales@infronttech.com.au · infronttech.com.au

For more information call or email — Australia-wide sales, technical support and warranty service.