# Right Angle Wall Mount Camera Bracket

Model: VSBKTB2203W

## Technical Specifications

Powder coated aluminium right angle wall mount bracket for surveillance cameras.

| Model | VSBKTB2203W |
|---|---|
| Materials | Aluminium Alloy and SECC material |
| Load Bearing Capacity | 1.00kg |
| Pipe Thread | N/A |
| Operating Conditions | -40° ~ 60°C / 90% RH (max) |
| Weather Resistance | N/A |
| Dimensions | 162 x 129.4 x 80mm |
| Weight | 0.56kg |



Product specifications and bracket compatibility are subject to change.

## Product Diagrams & Dimensions

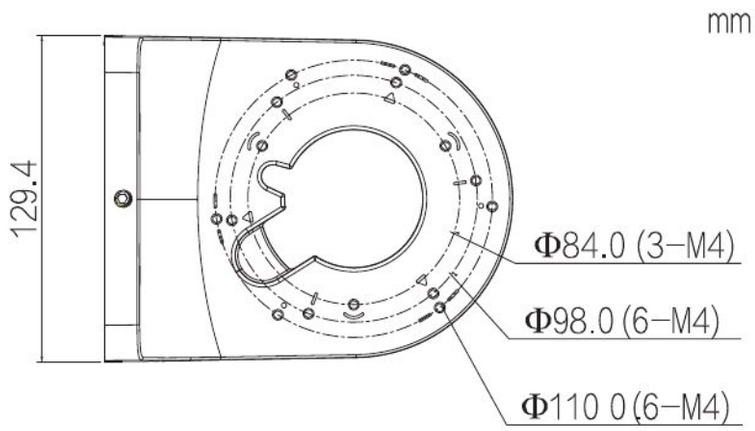


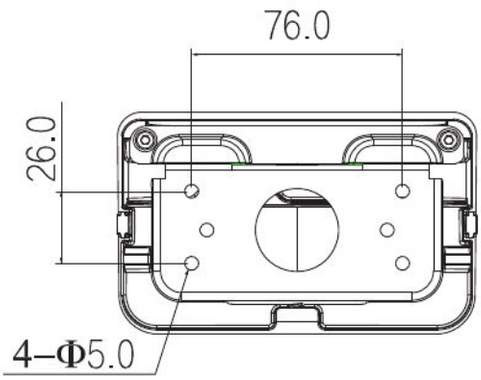


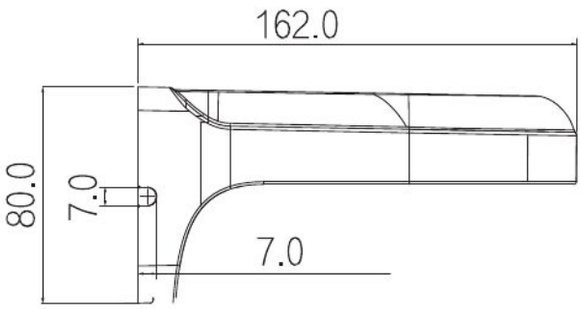


Your professional CCTV surveillance dealer:


INFRONT TECHNOLOGIES

**Supplied by INFRONT TECHNOLOGIES**

**Phone 1300 736 970**

sales@infronttech.com.au · infronttech.com.au

*For more information call or email — Australia-wide sales, technical support and warranty service.*