DH-PFA120

Junction Box



· Built of aluminum alloy.

· Matched with particular cameras, beautiful and elegant designed.



Series Overview

The Junction Box is beautifully designed and highly convenient. Cables can be organized in it and there are outlets at the bottom and side of the box, making it easy to install and use.

Scene

Ideal for mounting cameras, and works in temperatures ranging from –40 °C to +60 °C (–40 °F to +140 °F) and in environments with a relative humidity of less than 90%.

Technical Specification

Structure

Casing Material	Aluminum alloy
Product Dimensions	115.0 mm × 160.0 mm × 38.8 mm (4.53" × 6.30" × 1.53") (L × W × H)
Appearance Color	White
Net Weight	0.53 kg (1.17 lb)
Gross Weight	0.62 kg (1.37 lb)
Load Bearing	12.0 kg (26.46 lb)
Installation	Junction mount
Screw Thread Type	G1/2
Applicable Model	Please see "Camera Accessories Selection"
Packaging Dimensions	178.0 mm × 53.0 mm × 179.0 mm (7.01" × 2.09" × 7.05") (L × W × H)

Environment

Operating Temperature	–40 °C to +60 °C (–40 °F to +140 °F)
Operating Humidity	<90% (RH)
Storage Temperature	–40 °C to +60 °C (–40 °F to +140 °F)
Storage Humidity	10%–90% (RH)
Anti-corrosion Level	Basic Protection

Ordering Information

Type	Model	Description
Camera Mount	DH-PFA120	Junction Box

Installation

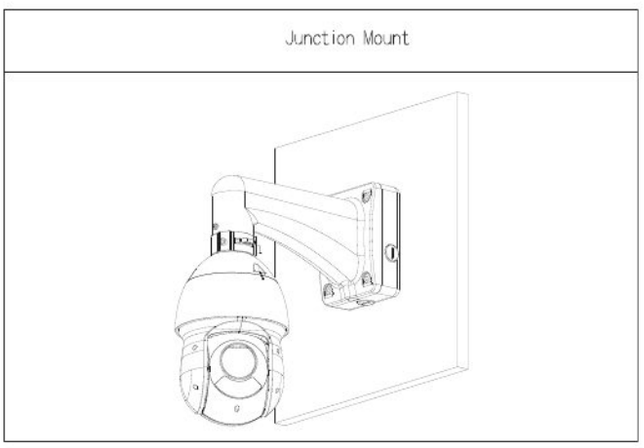

INFRONT TECHNOLOGIES

Supplied by INFRONT TECHNOLOGIES

Phone 1300 736 970

sales@infronttech.com.au · infronttech.com.au

For more information call or email — Australia-wide sales, technical support and warranty service.

Dimensions (mm[inch])

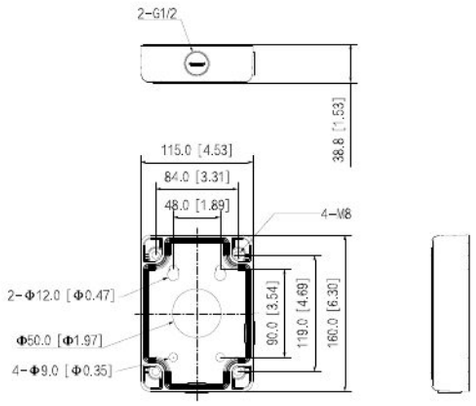

Package Information

- Junction box × 1
- M8×25 screw × 4
- S6.0 wrench × 1

Rev 002.000 © 2025 Dahua. All rights reserved. Design and specifications are subject to change without notice.
The images, specifications and information mentioned in the document are only for reference, and might differ from the actual product.

INFRONT TECHNOLOGIES

Supplied by INFRONT TECHNOLOGIES

Phone 1300 736 970

sales@infronttech.com.au · infronttech.com.au

For more information call or email — Australia-wide sales, technical support and warranty service.