DH-SD8A840-HNF-PA

8MP 40x Starlight IR PTZ AI Network Camera



- 1/1.8" 8Megapixel STARVIS™ CMOS
- Powerful 40x optical zoom
- Starlight technology
- Perimeter protection
- Metadata
- Face Recognition
- Auto-tracking
- Smart wiper
- IP67



WizMind

Launched by Dahua Technology, Dahua WizMind is a full portfolio of solutions composed of project-oriented products including IPC, NVR, PTZ, XVR, Thermal and software platform which adopts industry-leading deep learning algorithms. Focusing on customer's requirements, WizMind provides precise, reliable and comprehensive AI solutions for industry verticals.

System Overview

Dahua PTZ WizMind network camera adopts advanced CNN deep learning algorithms to achieve high accuracy. This camera possesses wide monitor range, PFA algorithm that can always present a clear, focused image while zooming, and smart wiper technology that supported by RainSensor.

Functions

Starlight Technology

For challenging low-light conditions, Dahua's Starlight Ultra-low Light Technology offers the best in light sensitivity, capturing color in vivid detail, even in lighting as low as 0.001 lux. The camera uses a set of optical features to balance light throughout the scene, producing clear images in dark environments.

Perimeter Protection

Automatically filters out false alarms caused by animals, rustling leaves, bright lights, and more, and uses secondary recognition during target detection to improve alarm accuracy.

Video Metadata

Metadata is information on the attributes of targets that is extracted during monitoring. It can be used for data retrieval. There are four kinds of metadata supported by Dahua PTZ WizMind cameras: Human face, human body, motor vehicle and non-motor vehicle. Face information includes gender, age, glasses, masks, beards, and more. Human body information includes hat, top, top color, bottom, bottom color, bag, and more. Motor vehicle information includes plate color, type, vehicle color, sun visor, ornament, calling, seatbelt, smoking, annual inspection sticker, and more. Non-motor vehicle information includes type, color, top type, top color, people number, and more.

Auto-tracking

This feature controls the pan, tilt and zoom actions of the camera to automatically track an object in motion, to keep it in view of the camera. Tracking can be triggered manually or automatically by defined rules. Once a rule is triggered, the camera can zoom in and track the defined target automatically.

PFA Technology

PFA technology has introduced new methods of judgment that ensure the accuracy and predictability of the direction of subject distance adjustment. The result is a set of advanced focusing algorithms that ensure image clarity when zooming and that shorten focus time. This makes the camera highly advanced in its functions, substantially improving the quality of your experience.

Smart H.265+

Smart H.265+ is the optimized implementation of the H.265 codec that uses a scene-adaptive encoding strategy, dynamic GOP, dynamic ROI, a flexible multi-frame reference structure and intelligent noise reduction to deliver high-quality videos without straining the network. Smart H.265+ technology outranks standard H.265 video compression, reducing bit rate and storage requirements by up to 70%.

INFRONT TECHNOLOGIES

Supplied by INFRONT TECHNOLOGIES

Phone 1300 736 970

sales@infronttech.com.au · infronttech.com.au

For more information call or email — Australia-wide sales, technical support and warranty service.

Technical Specification

Camera

Image Sensor	1/1.8" CMOS
Pixel	8 MP
Max. Resolution	3840 (H) x 2160 (V)
ROM	8 GB
RAM	2 GB
Electronic Shutter Speed	1/1 s–1/30,000 s
Scanning System	Progressive
Min. Illumination	Color: 0.005 lux@F1.4 B/W: 0.0005 lux@F1.4 0 lux@F1.4 (illuminator on)
Illumination Distance	500 m (1640.42 ft)
Illuminator On/Off Control	Zoom Prio; Manual; Smart IR
Illuminator Number	10 IR lights
Wiper	Smart wiper

Lens

Focal Length	5.6 mm–223 mm
Max. Aperture	F1.4–F4.5
Field of View	H: 63.9°–2.0°; V: 37.3°–1.1 °; D: 71.2°–2.3 °
Optical Zoom	40x
Focus Control	Auto; semi-auto; manual
Close Focus Distance	0.5 m–2 m (1.64 ft–6.56 ft)
Iris Control	Auto; manual

DORI Distance	Detect	Observe	Recognize	Identify
	4,400 m (14,435.70 ft)	1,740 m (5,708.66 ft)	880 m (2,887.14 ft)	440 m (1,443.57 ft)

*DORI (Detect, Observe, Recognize, Identify) is a standard system (EN-62676-4) for defining the ability of a person viewing the video to distinguish persons or objects within a covered area. The numbers in this table do not reflect intelligent function distances. For intelligent function distances, refer to installation and commissioning manual/ project design tool.

PTZ

Pan/Tilt Range	Pan: 0° to 360° Tilt: –30° to +90°, auto flip 180°
Manual Control Speed	Pan: 0.1°/s–240°/s Tilt: 0.1°/s–100°/s
Preset Speed	Pan: 240°/s; Tilt: 120°/s
Preset	300
Tour	8 (up to 32 presets per tour)
Pattern	5
Scan	5
Speed Adjustment	Yes
Power-off Memory	Yes
Idle Motion	Preset; Tour; Pattern; Scanning
PTZ Protocol	DH-SD Pelco-P/D (auto recognition)

Smart Event

Event Trigger	Motion detection, video tampering, scene changing, network disconnection, IP address conflict, illegal access, and storage anomaly
IVS	Object Abandoned/Missing

Intelligence

Video Metadata	Support human body, human face, motor vehicle and non-motor vehicle image capture and attributes extraction.
IVS (Perimeter Protection)	Tripwire; intrusion; climbing fences; loitering detection; abandoned/missing object; fast moving; parking detection; people gathering; vehicle/human alarm classification
Face Recognition	Yes
Auto Tracking	Yes

Video

Video Compression	Smart H.265+; H.265; Smart H.264+; H.264; MJPEG (Sub Stream 1)
Streaming Capability	3 streams
Resolution	4K (3840 × 2160); 4M (2560 × 1440); 1080p (1920 × 1080); 1.3M (1280 × 960); 720p (1280 × 720); D1 (704 × 576); CIF (352 × 288)
Video Frame Rate	Main stream: 4K/4M/1080p/1.3M/720p (1–25/30 fps) Sub stream 1: D1/CIF (1–25/30 fps) Sub stream 2: 1080p/1.3M/720p (1–25/30 fps)
Bit Rate Control	CBR; VBR
Video Bit Rate	H264: 512 kbps–16384 kbps H265: 256 kbps–10240 kbps
Day/Night	Auto (ICR); Color; B/W
BLC	Yes
WDR	DWDR
HLC	Yes
White Balance	Auto; indoor; outdoor; tracking; manual; sodium lamp; natural light; street lamp
Gain Control	Auto; manual
Noise Reduction	2D NR; 3D NR
Motion Detection	Yes
Region of Interest (RoI)	Yes
Defog	Optical
Digital Zoom	16x
Image Rotation	0°; 180°
Privacy Masking	Up to 24 areas can be set, with up to 8 areas in the same view
S/N Ratio	≥55 dB

Audio

Audio Compression	G.711a; G.711mu; G.726; AAC; G722.1; G.729; MPEG2-Layer2; G723

INFRONT TECHNOLOGIES

Supplied by INFRONT TECHNOLOGIES

Phone 1300 736 970

sales@infronttech.com.au · infronttech.com.au

For more information call or email — Australia-wide sales, technical support and warranty service.

Network

Network Port	RJ-45 (10/100 Base-T)
Network Protocol	IPv4; IPv6; HTTP; HTTPS; 802.1x; QoS; FTP; SMTP; UPnP; SNMP v1/v2c/v3 (MIB-2); DNS; DDNS; NTP; RTSP; RTP; TCP; UDP; IGMP; ICMP; DHCP; PPPoE; ARP; RTCP; RTMP
Interoperability	ONVIF (Profile S&G&T); CGI
Streaming Method	Unicast; Multicast
User/Host	20 (total bandwidth: 64 M)
Storage	FTP; Micro SD card (512GB)
Browser	IE 7 and later versions Chrome 42 and earlier versions Firefox 52 and earlier versions Safari
Management Software	Smart PSS; DSS; DMSS; Easy4ip; IVSS
Mobile Client	iOS; Android

Certification

Certifications	CE: EN55032/EN55024/EN50130-4 FCC: Part15 subpartB, ANSI C63.4-2014

Port

Analog Output	1 BNC
RS-485	1 (baud rate range: 1200 bps–9600 bps)
Alarm I/O	7/2
Audio I/O	1/1

Power

Power Supply	36 VDC, 2.23 A (±25%) Hi-PoE
Power Consumption	Basic: 30 W Max.: 48 W (illuminator + PTZ + Heater + Fan)

Environment

Operating Temperature	–40 °C to +70 °C (–40 °F to +158 °F)
Operating Humidity	≤95% (RH)
Protection	IP67; TVS 6000 V lightning protection; surge protection; voltage transient protection

Structure

Casing	Metal
Product Dimensions	415.6 mm × Φ26 2 mm (16.36" × Φ10.31")
Net Weight	10 kg (22.05 lb)
Gross Weight	12 kg (26.46 lb)

Ordering Information

Type	Model	Description
8M WizMind PTZ Camera	DH-SD8A840-HNF-PA	8 MP 40x Starlight WizMind Network PTZ Camera, PAL
	DH-SD8A840N-HNF-PA	8 MP 40x Starlight WizMind Network PTZ Camera, NTSC
	SD8A840-HNF-PA	8 MP 40x Starlight WizMind Network PTZ Camera, PAL
	SD8A840N-HNF-PA	8 MP 40x Starlight WizMind Network PTZ Camera, NTSC
Accessories	DC36V/2.23A	Power Adapter
	PFB306W	Wall Mount Bracket
	PFA118	Mount Adapter
	PFB710C	Ceiling Mount Bracket
	PFA150	Pole Mount Bracket
	PFB301S-E	Plane Mount Bracket
	PFA120	Junction Box
	PFB301C	Ceiling Mount Bracket
	PFA151	Corner Mount Bracket

Accessories

Included:



DC36V/2.23A
Power Adapter



PFB306W
Wall Mount Bracket

Optional:



PFA118
Mount Adapter



PFB710C
Ceiling Mount Bracket



PFA150
Pole Mount Bracket



PFB301S-E
Plane Mount Bracket



PFA120
Junction Box



PFB301C
Ceiling Mount Bracket



PFA151
Corner Mount Bracket

INFRONT TECHNOLOGIES

Supplied by INFRONT TECHNOLOGIES

Phone 1300 736 970

sales@infronttech.com.au · infronttech.com.au

For more information call or email — Australia-wide sales, technical support and warranty service.

Wall Mount	Ceiling Mount	Ceiling Mount
PFB306W+PFA120	PFA118+PFB370C	PFA118+PFB301C
		
Pole Mount(Vertical)	Corner Mount	Pole Mount(Horizontal)
PFB306W+PFA150	PFB306W+PFA151	PFA118+PFB301C+PFA150
		
Plane Mount		
PFA118+PFB301S-E		
		

Dimensions (mm[inch])

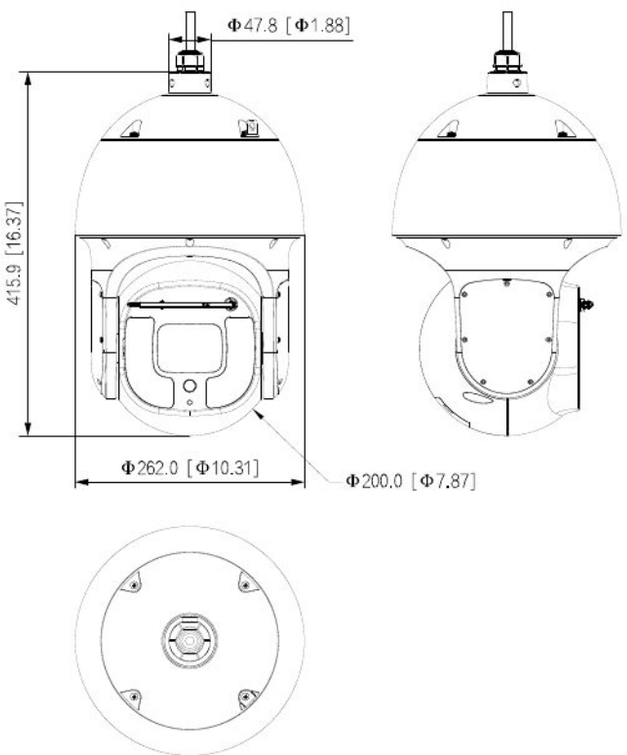

Rev 002.000 © 2026 Dahua. All rights reserved. Design and specifications are subject to change without notice.
The images, specifications and information mentioned in the document are only for reference, and might differ from the actual product.

INFRONT TECHNOLOGIES

Supplied by INFRONT TECHNOLOGIES

Phone 1300 736 970

sales@infronttech.com.au · infronttech.com.au

For more information call or email — Australia-wide sales, technical support and warranty service.