DH-SD6C3425GB-HNR-A-PV1

4MP 25x Starlight TiOC Network PTZ Camera



- 1/2.8" 4Megapixel STARVIS™ CMOS.
- 25× optical zoom.
- Starlight technology.
- Max. 25/30 fps@4MP.
- IR distance up to 150 m.
- Perimeter protection.
- Face detection.
- Full-color illuminator; red and blue warning light.
- Auto tracking 3.0



Launched by Dahua Technology, WizSense is a series of AI products and solutions that adopts independent AI chip and deep learning algorithm. It focuses on human and vehicle with high accuracy, enabling users to fast act on defined targets. Based on Dahua's advanced technologies, WizSense provides intelligent, simple and inclusive products and solutions.

System Overview

With its powerful optical zoom, and accurate pan and tilt capabilities, the PTZ camera provides an all-in-one solution for long distance video surveillance of outdoor scenes. Together with infrared illumination and Starlight Technology, the camera is a great solution for dark, low light conditions. The series combines a day and night mechanical IR cut filter to produce high quality images in variable lighting conditions during the day.

Functions

Starlight Technology

With advanced image processing technology and optical technology, Dahua Starlight technology can provide clear colorful video in the environment of low illuminance. It widely applies to various environments of low illuminance.

PFA Technology

PFA technology has introduced new methods of judgment that ensure the accuracy and predictability of the direction of subject distance adjustment. The result is a set of advanced focusing algorithms that ensure image clarity when zooming and that shorten focus time. This makes the camera highly advanced in its functions, substantially improving the quality of your experience.

Auto tracking

This feature controls the pan, tilt and zoom actions of the camera to automatically track an object in motion, to keep it in view of the camera. Tracking can be triggered manually or automatically by defined rules. Once a rule is triggered, the camera can zoom in and track the defined target automatically.

SMD 4.0

Dahua Smart Motion Detection technology works with intelligent algorithms to classify targets that trigger motion detection alarms. It filters out objects that are not targets, such as small and large animals, to avoid triggering false alarms. With an AI NVR, Quick Pick technology becomes available, allowing you to easily search for and pick out human and vehicle targets from SMD event videos, prioritizing the highest matches.

Wide Dynamic Range

The camera produces vivid images, even in high-contrast lighting conditions, by using industry-leading wide dynamic range (WDR) technology. For scenes that quickly alternate between bright and low lighting, WDR adjusts to fully capture both the bright and dark areas of a scene, producing superior quality videos.

Perimeter Protection

Automatically filters out false alarms caused by animals, rustling leaves, bright lights, and more, and uses secondary recognition during target detection to improve alarm accuracy.

Protection (IP66, TVS 6000 V)

IP66, TVS 6000 V lightning proof, surge protection, and voltage transient protection.

INFRONT TECHNOLOGIES

Supplied by INFRONT TECHNOLOGIES

Phone 1300 736 970

sales@infronttech.com.au · infronttech.com.au

For more information call or email — Australia-wide sales, technical support and warranty service.

Technical Specification

Camera

Image Sensor	1/2.8" CMOS
Pixel	4 MP
Max. Resolution	2560 (H) × 1440 (V)
ROM	4 GB
RAM	1 GB
Electronic Shutter Speed	1/1 s–1/30,000 s
Scanning System	Progressive
Min. Illumination	Color: 0.005 lux@F1.6 B/W: 0.0005 lux@F1.6 0 lux(IR light on)
Illumination Distance	50 m (164.04 ft) (white light) 150 m (492.13 ft) (IR)
Illuminator On/Off Control	Zoom Prio; Manual; Smart IR; Off
Illuminator Number	2 (IR) 2 (Dual light fusion)

Lens

Focal Length	5 mm–125 mm
Max. Aperture	F1.6–F3.6
Field of View	H: 51.9°–3.0°; V: 39.7°–2.2°; D: 63.1°–3.7°
Optical Zoom	25×
Focus Control	Auto; semi-auto; manual
Close Focus Distance	0.1 m–1.5 m (0.33 ft–4.92 ft)
Iris Control	Auto; manual

DORI Distance	Detect	Observe	Recognize	Identify
	2,500 m (8202.10 ft)	987.5 m (3239.83 ft)	500 m (1640.42 ft)	250 m (820.20 ft)

*DORI (Detect, Observe, Recognize, Identify) is a standard system (EN-62676-4) for defining the ability of a person viewing the video to distinguish persons or objects within a covered area. The numbers in this table do not reflect intelligent function distances. For intelligent function distances, refer to installation and commissioning manual/project design tool.

PTZ

Pan/Tilt Range	Pan: 0° to 360° endless Tilt: –20° to +90°, auto flip 180°
Manual Control Speed	Pan: 0°/s–300°/s Tilt: 0°/s–100°/s
Preset Speed	Pan: 0°/s–300°/s Tilt: 0°/s–100°/s
Preset	300
Tour	8 (up to 32 presets per tour)
Pattern	5
Scan	5
Power-off Memory	Yes
Idle Motion	Pattern; Preset; Scan; Tour
PTZ Protocol	DH-SD

Intelligence

Video Metadata	Detects motor and non-motor vehicles, faces and human bodies. It also performs tracking, takes snapshots, uploads high-quality face images and optimizes images. It extracts attributes from motor vehicles, detecting up to 10 attributes for them.
IVS (Perimeter Protection)	Tripwire; intrusion; crossing fence detection; loitering detection; abandoned/missing object; fast moving; parking detection; people gathering; vehicle/human alarm classification; linkage tracking
Face Detection	Supports face detection, face bounding box, capturing snapshots, uploading face snapshots, enhancing face images, and selecting a preferred image among a group of snapshots. Attribute Extraction is also supported, where 6 attributes and 8 expressions can be detected. Face cutout is also offered, where you can cutout one face at a time and customize the size to be a one-inch photo. The supported methods for capturing snapshots are real-time capturing, quality first, and selecting a preferred image among a group of snapshots.
Construction Detection	Detects 6 helmet colors: Red, orange, yellow, blue, white, and black. An alarm will be triggered when a person is not wearing a helmet or when the color of the helmet that they are wearing does not match the configured color. It also supports compliance detection for work uniforms. Up to 5 work uniform sample libraries can be uploaded, which together can contain up to 1,000 images (the images must be 1080p and in the JPG format). An alarm will be triggered when the similarity between the detected work uniform and the samples in the library is below the set threshold (that is, below the minimum compliance standard for work uniforms). The system supports detecting the attributes of work uniforms such as the color of the uniform, and whether or not the person is wearing a mask and wearing shoe covers. An alarm will be triggered when the target is detected as not meeting the set requirements. It also detects and triggers alarms when only one person is in the construction site, and when no one is present in the detection area such as when a worker leaves their post or an area is left unmanned.
Auto Tracking	Yes
SMD	SMD 4.0
Acupick	Uses deep learning algorithms and works with back-end devices to accurately match targets, such as people and motor vehicles, and search through live and recorded videos to quickly locate targets.
Auto Patrol	It triggers the IVS rule when a target is detected and makes the camera link with the PTZ to rotate to the position of the target and patrol based on its presets.

Active Deterrence

Light Warning	Red and blue warning light. They can be configured to flash for 5 to 30 seconds with a high, medium or low frequency.
Sound Warning	Customizable sound alarm

Video

Video Compression	H.264H;H.264B;Smart H.265+;H.264;H.265;MJPEG(Sub Stream);Smart H.264+
Streaming Capability	3 streams
Resolution	4M (2560 × 1440); 3M (2048 × 1536); 3M (2304 × 1296); 1080p (1920 × 1080); 720p (1280 × 720); 1.3M (1280 × 960); D1 (704 × 576/704 × 480); VGA (640 × 480); CIF (352 × 288/352 × 240)
Video Frame Rate	Main stream: 4M/3M/1080p/1.3M/720p@ (1–25/30 fps) Sub stream 1: D1/VGA/CIF@ (1–25/30 fps) Sub stream 2: 1080p/1.3M/720p@ (1–25/30 fps)

INFRONT TECHNOLOGIES

Supplied by INFRONT TECHNOLOGIES

Phone 1300 736 970

sales@infronttech.com.au · infronttech.com.au

For more information call or email — Australia-wide sales, technical support and warranty service.

Bit Rate Control	CBR/VBR
Video Bit Rate	H264: 96 kbps–14848 kbps H265: 38 kbps–8960 kbps
Day/Night	Auto (ICR)/Color/B/W
BLC	Yes
WDR	Yes
HLC	Yes
White Balance	Auto; indoor; outdoor; tracking; manual; sodium lamp; natural light; street lamp
Gain Control	Auto; manual
Noise Reduction	2D NR; 3D NR
Motion Detection	Yes
Region of Interest (RoI)	Yes
Image Stabilization	Electronic (EIS)
Defog	Electronic
Digital Zoom	16×
Image Rotation	180°
Privacy Masking	Up to 24 areas can be set, with up to 8 areas in the same view; multiple colors available
S/N Ratio	≥55 dB

Audio

Audio Compression	PCM; G.711a; G.711Mu; G.726; MPEG2-Layer2; G722.1; G729; G723

Network

Network Port	RJ-45 (10/100 Base-T)
Network Protocol	FTP;RTMP;IPv6;Bonjour;IPv4;DNS;RTCP;PPPoE;NTP;RTP;802.1x;HTTPS;SNMP;TCP/IP;DDNS;UPnP;NFS;ICMP;UDP;IGMP;HTTP;SSL;DHCP;SMTP;Qos;RTSP;ARP
Interoperability	CGI;SDK;ONVIF (Profile S&G&T)
Streaming Method	Unicast/Multicast
User/Host	20 (total bandwidth: 64 M)
Storage	FTP/SFTP; Micro SD card (512 GB); NAS
Browser	IE 9 and later versions Chrome 41 and later versions Firefox 50 and later versions Safari 10 and later versions
Management Software	DSS; DMSS
Mobile Client	iOS; Android

Certification

Certifications	CE-EMC: EN 55032; EN 61000-3-3; EN 61000-3-2; EN 50130-4; EN 55035 CE-LVD: EN 62368-1 FCC: 47 CFR FCC Part15, Subpart B, NSI C63.4

Port

Audio Input	1 channel
Audio Output	1 channel
Alarm Linkage	Capture; recording; send email; preset; tour; pattern; alarm digital input; audio; warning light
Alarm Event	Motion/tampering detection; audio detection; network disconnection detection; IP conflict detection; memory card state detection; memory space detection
Alarm I/O	2/1
Audio I/O	1/1

Power

Power Supply	24 VDC/2.5 A ± 25% (included) PoE+ (802.3at)
Power Consumption	Basic: 13 W Max.: 23 W (illuminator + red and blue warning light + speaker + PTZ working)

Environment

Operating Temperature	–40 °C to +70 °C (–40 °F to +158 °F)
Operating Humidity	≤95%
Protection	IP66; TVS 6000 V lightning proof; surge protection; voltage transient protection

Structure

Product Dimensions	325.3 mm × Φ202.0 mm (12.81" × Φ7.95")
Net Weight	4.6 kg (10.14 lb)
Gross Weight	7.13 kg (15.72 lb)

Ordering Information

Type	Model	Description
4M WizSense PTZ Camera	DH-SD6C3425GB-HNR-A-PV1	4MP 25x Starlight TiOC Network PTZ Camera
	SD6C3425GB-HNR-A-PV1	4MP 25x Starlight TiOC Network PTZ Camera
Accessories	DC24V/2.5A	Power Adapter
	PFB305W	Wall Mount Bracket
	PFA111	Mount Adapter
	PFB300C	Ceiling Mount Bracket
	PFB301C	Ceiling Mount Bracket
	PFB303S	Parapet Mount Bracket
	PFB301S-E	Plane Mount Bracket
	PFA151	Corner Mount Bracket
	PFA150	Pole Mount Bracket
	PFA126	Water-proof Power Box

INFRONT TECHNOLOGIES

Supplied by INFRONT TECHNOLOGIES

Phone 1300 736 970

sales@infronttech.com.au · infronttech.com.au

For more information call or email — Australia-wide sales, technical support and warranty service.

Accessories

Included:



DC24V/2.5A
Power Adapter



PFB305W
Wall Mount
Bracket

Optional:



PFA111
Mount
Adapter



PFB300C
Ceiling Mount
Bracket



PFB301C
Ceiling Mount
Bracket



PFB303S
Parapet Mount
Bracket



PFB301S-E
Plane Mount
Bracket



PFA151
Corner Mount
Bracket



PFA150
Pole Mount
Bracket



PFA126
Water-proof
Power Box

Wall Mount	Ceiling Mount	Ceiling Mount
PFB305W+PFA126	PFA111+PFB300C	PFA111+PFB301C
		
Pole Mount(Vertical)	Corner Mount	Pole Mount(Horizontal)
PFB305W+PFA150	PFB309W+PFA151	PFA111+PFB300C+PFA150
		
Plane Mount	Parapet Mount	
PFB301S-E	PFA111+PFB303S	
		

Dimensions (mm[inch])

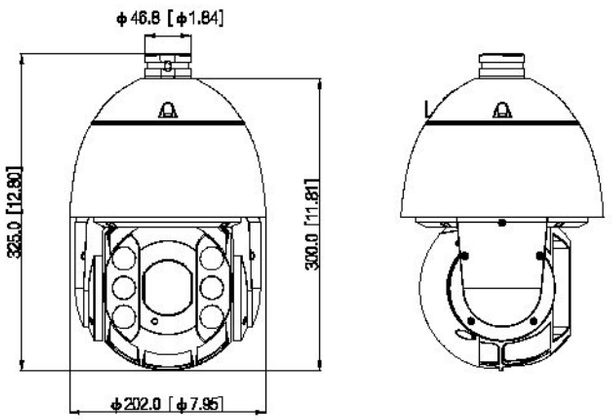

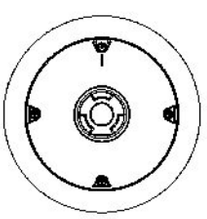

Rev 002.000 © 2025 Dahua. All rights reserved. Design and specifications are subject to change without notice.
The images, specifications and information mentioned in the document are only for reference, and might differ from the actual product.

INFRONT TECHNOLOGIES

Supplied by INFRONT TECHNOLOGIES

Phone 1300 736 970

sales@infronttech.com.au · infronttech.com.au

For more information call or email — Australia-wide sales, technical support and warranty service.