DHI-KTX01

Video Intercom KIT







2-wire Wi-Fi Hybrid Indoor Monitor:

- 7" TFT capacitive touch screen.
- Offers video intercom that communicates with VTOs through half-duplex, and the app through full-duplex.
- Supports recording videos and capturing snapshots. (SD card is required).
- 6-channel alarm input and 1-channel alarm output.
- The app can be used to receive calls and alarm notifications.
- Connects to HDCVI camera.

2-wire Hybrid Villa Door Station:

- Aluminum alloy front panel.
- Auto IR illumination.
- Video messages can be left for unanswered calls. (SD card is required for VTH).
- Features nameplate and DWDR.
- Supports local lock and second lock.
- Offers anti-tampering alarm.
- IP65 and IK07 rated.



Technical Specification

DHI-VTO2003F

System	
Main Processor	Embedded Processor
Button Type	Mechanical
Basic	
Camera	1/2.8" 2 MP CMOS HDR Camera
Field of View	H: 110°; V: 60°
WDR	DWDR
Noise Reduction	3D NR
Video Resolution	P: 960 (H) × 576 (V) N: 960 (H) × 480 (V)
Video Frame Rate	P: 25 fps N: 30 fps
Light Compensation	Auto IR
Day/Night	Auto(ICR)/Color/B/W
Audio Input	1
Audio Output	Built-in speaker
Audio Mode	Two-way audio (half–duplex)
Function	
Unlock Mode	Remote unlock
Leave Videos	Yes (SD card inserted in VTH is needed)

Performance	
Casing Material	Aluminum Alloy
Port	
RS-485	1
Alarm Output	1
Power Output	1 × 12 VDC output, 200 mA
Exit Button	1
Door Status Detection	1
Lock Control	1
Alarm	
Tamper Alarm	Yes
General	
Appearance Color	Silver
Power Supply	2-wire controller
Installation	Flush mount; surface mount

INFRONT TECHNOLOGIES

Supplied by INFRONT TECHNOLOGIES

Phone 1300 736 970

sales@infronttech.com.au · infronttech.com.au

For more information call or email — Australia-wide sales, technical support and warranty service.

Certifications	CE; FCC
Product Dimensions	130 mm × 96 mm × 28.5 mm (5.12" × 3.78" × 1.12")
Protection	IP65 IK07
Operating Temperature	–40 °C to +60°C (–40 °F to +140 °F)
Operating Humidity	10%–95% (RH), non-condensing
Operating Altitude	0 m–3000 m (0 ft – 9842.52 ft)
Power Consumption	≤ 1.5 W (standby), ≤ 10 W(working)
Gross Weight	0.502 kg (1.11 lb)
Storage Temperature	–40 °C to +70°C (–40 °F to +158 °F)
Storage Humidity	95% (RH), non-condensing

DHI-VTH5123H-W

System

Main Processor	Embedded Processor
Operating System	Embedded operating system
Network Protocol	IPv4; UDP; DNS; TCP

Basic

Screen Type	Capacitive Touchscreen
Display Screen	7" TFT
Screen Resolution	1024 (H) × 600 (V)
Audio Compression	G.711a; G.711u; PCM
Audio Input	1
Audio Output	Built-in speaker
Audio Mode	Two-way audio with VTO (half–duplex);Two-way audio with app (full–duplex)
Audio Enhancement	Echo suppression/digital noise reduction
Audio Bit Rate	16 kHz; 16 bit

Function

Leave Videos	Yes (SD card needed)
DND Mode	Do not disturb period can be set; Do not disturb mode can be set.
Number of Extensions	5
Wi-Fi	Yes
Wireless Standard	IEEE802.11b/802.11g/802.11n
Wireless Frequency Range	2.4 GHz
Max Transmission Power	≤20 dBm@2,400–2,483.5 MHz
Storage	Micro SD card (up to 64 GB)

Port

RS-485	1
Alarm Input	6
Alarm Output	1
Power Output	1 (12 V, 200 mA)
Door Bell	Yes (use the alarm input port)

Performance

Casing Material	PC + ABS

General

Appearance Color	White
Power Supply	2-wire controller
Installation	Surface Mount
Certifications	CE; FCC
Product Dimensions	130 mm × 189 mm × 23.9 mm (5.12" × 7.44" × 0.94")
Operating Temperature	–10 °C to +55°C (14 °F to +131 °F)
Operating Humidity	10%–95% (RH)
Operating Altitude	0 m–3000 m (0 ft – 4265.09 ft)
Power Consumption	≤ 2.5 W (standby), ≤ 10 W(working)
Gross Weight	0.633 kg (1.40 lb)
Storage Temperature	–40 °C to +70°C (–40 °F to +158 °F)
Storage Humidity	95% (RH), non-condensing

VTNC1003C

Performance

Casing Material	PC + ABS

General

Appearance Color	White
Power Supply	48 VDC
Certifications	CE; FCC
Accessory	Included: Line termination terminal
Product Dimensions	65.2 mm × 46.2 mm × 23.2 mm (2.57" × 1.82" × 0.91")
Operating Temperature	–10 °C to +55°C (14 °F to +131 °F)
Operating Humidity	10%–95% (RH)
Operating Altitude	0 m–3000 m (0 ft – 4265.09 ft)
Power Consumption	3.5 W
Gross Weight	0.13 kg (0.29 lb)

INFRONT TECHNOLOGIES

Supplied by INFRONT TECHNOLOGIES

Phone 1300 736 970

sales@infronttech.com.au · infronttech.com.au

For more information call or email — Australia-wide sales, technical support and warranty service.

Ordering Information

Type	Model	Description
Kit	DHI-KTX01(F)	Video Intercom Kit. It includes: DHI-VTO2003F: 2-wire Hybrid Villa Door Station DHI-VTH5123H-W: 2-wire Wi-Fi Hybrid Indoor Monitor VTNC1003C: 2-wire Controller VTM114: Flush Mounted Box 1 × Power Adapter 1 × Power Cord
	DHI-KTX01(S)	Video Intercom Kit. It includes: DHI-VTO2003F: 2-wire Hybrid Villa Door Station DHI-VTH5123H-W: 2-wire Wi-Fi Hybrid Indoor Monitor VTNC1003C: 2-wire Controller VTM115: Surface Mounted Box 1 × Power Adapter 1 × Power Cord

Relevant Products

DHI-KTX01(F)



DHI-VTO2003F



DHI-VTH5123H-W



VTNC1003C



VTM114



VTM114

DHI-KTX01(S)



DHI-VTO2003F



DHI-VTH5123H-W



VTNC1003C



VTM115

Installation (mm[inch])

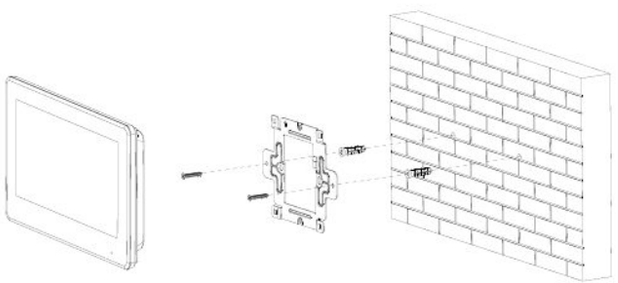

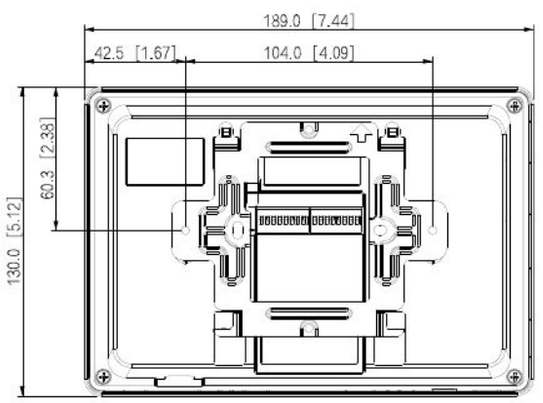

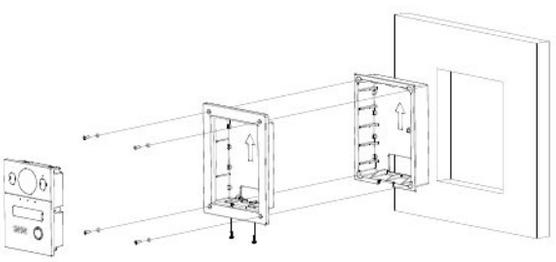

INFRONT TECHNOLOGIES

Supplied by INFRONT TECHNOLOGIES

Phone 1300 736 970

sales@infronttech.com.au · infronttech.com.au

For more information call or email — Australia-wide sales, technical support and warranty service.

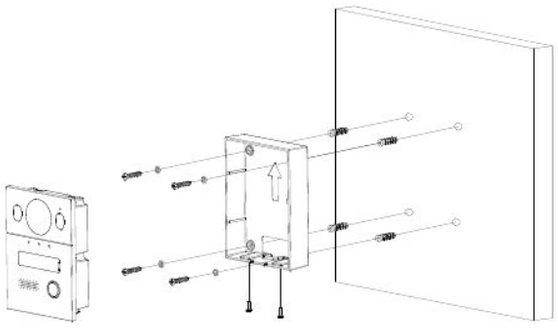

Application

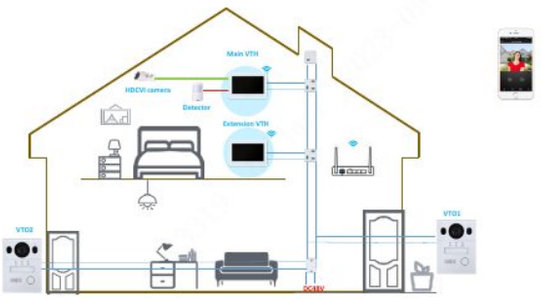

Dimensions (mm[inch])

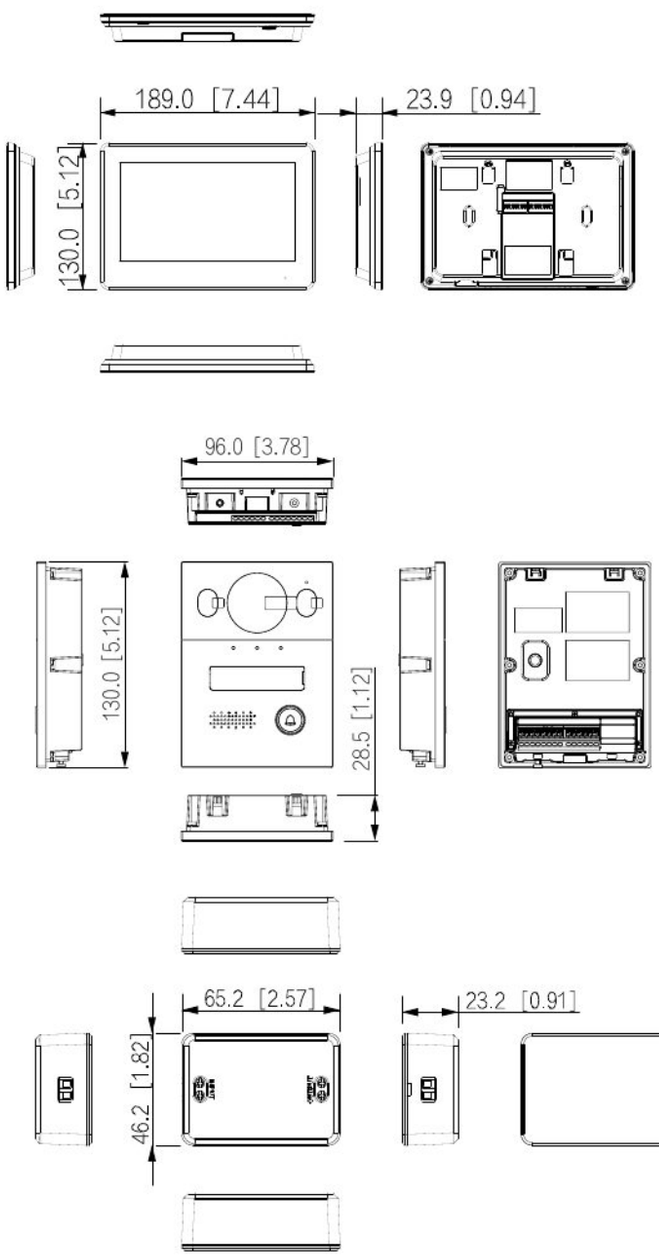

Rev 002.000 © 2024 Dahua. All rights reserved. Design and specifications are subject to change without notice.
The images, specifications and information mentioned in the document are only for reference, and might differ from the actual product.

INFRONT TECHNOLOGIES

Supplied by INFRONT TECHNOLOGIES

Phone 1300 736 970

sales@infronttech.com.au · infronttech.com.au

For more information call or email — Australia-wide sales, technical support and warranty service.